STERN PINBALL, INC.

24

MANUAL

© 2008 Stern

Optional Kits available through your Distributor:

Pinball Location Maintenance Standard Kit (for 241 Pinball) 502-6002-A7

Standard Kit includes : *8 oz. Novus Wax #2 Fine (Red) (**675-0003-01**), Cloth, Rubber Rings (used above playfield), Bulbs (Bulb quantities vary and is limited to 25 per type), Fuses (1/per type) and 4 Pinballs.* ***Note:*** *Quanties, sizes and contents subject to change without notice.*

Pinball Location Maintenance Deluxe Kit (for 24 Pinball) 502-6003-A7

Deluxe Kit includes : *Pinball Location Maintenance Standard Kit as described above plus a quantity of Flipper Rebuild Kits.* ***Note:*** *Quantity varies which equals the same quantity of flippers used in this game.*

▲ THIS GAME KIT INCLUDES (2) FLIPPER REBUILD KITS ▲

Plastics*Kit (for 24 Pinball) 803-5000-A7

Plastics Kit includes: *Plastic Sets (830-6079-XX)*

Decals*Kit (for 24 Pinball) 802-5000-A7

Decals Kit includes: *Decal Set (820-6417-XX)*

Mylar*Kit (for 24 Pinball) 802-5001-A7

Mylar Kit includes: *Ball Drop (Square) (820-5815-00), Pop Protector (820-6418-00)*

****Attention:*** *No individual Plastic or Decal can be ordered separately, unless noted otherwise. Plastics & Decals are subject to change without notice during and / or after production. Key Fobs subject to availability and may or may not be included in the plastic set. All designs, shapes & pieces used subject to change without notice. Kit contents subject to change. Service Bulletin(s) will announce any critical changes, if warranted. The last 2-digits shown on plastics or decals are for reference only.*

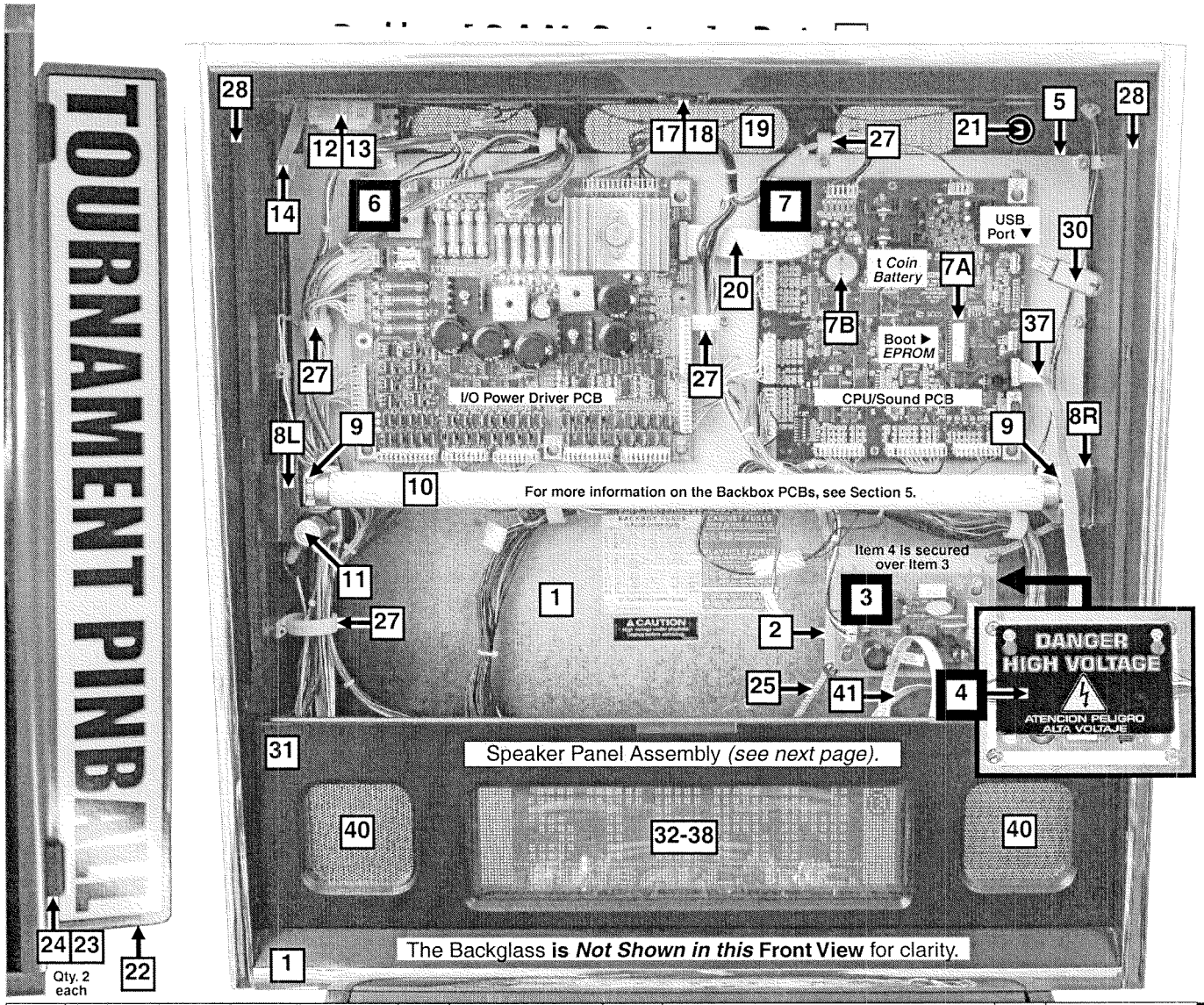

Parts Identification

Nr.	BACKBOX PARTS	QTY.	SPI PART Nr.
1	Backbox 24™ (No Parts)	1	525-5631-17-A7

Item 1 Note: Chrome T-Molding is installed and cannot be ordered separately.
Fuse Description (**820-6384-00**) **and** High Voltage Caution (uL) (**820-6082-01 & -02**) Decals.

2	PCB Metal Mounting Plate [Display]	1	535-9769-00
3	Display Power Supply PCB	1	**520-5138-00**

Item 3 is secured to @ bottom by: #8-32 X 3/8" SHWH Swg. (Zinc) (Qty. 2) (237-5975-00)

4	Plastic Cover [**DANGER HIGH VOLTAGE**]	1	830-6053-00

Items 3 & 4 are secured to @ top by: 1-1/4" X 3/8" Plastic Spacer Gray (Qty. 2) (254-5000-05) **and** #8-32 X 1-3/4" SHWH Ser. (Zinc) (Qty. 2) (237-5975-28)

5	PCB Metal Mounting Plate [I/O+CPU]	1	535-9664-00

Items 2 & 5 are secured to Item 1 by: #8 X 1/2" SHWH AB (Zinc) (Qty. 1/hole) (234-5101-00) **and** #10 Washer 7/32" I.D. X .5" O.D. X 1/16" Thick (Qty. 1/hole) (242-5003-00)
***Note:** Where a Wire Clamp (Item 27) is mounted, a #10 Washer is not required.*

6	I/O Power Driver PCB [S.A.M. Sys.]	1	**520-5249-00**
7	CPU/Sound PCB [S.A.M. System]	1	**520-5246-00**

7A: 8MB EPROM #M27C801-100F1 (**960-5016-00**)
***Ordering Note:** Programmed EPROM (**965-BOOT-SAM**)*
7B: Coin Cell Battery (CR2430 3V) (**000-0644-01**)
*For USB Memory Stick Information, see Item **30** on the next page.*

Items 6 & 7 are secured to Item 5 by: #8-32 X 3/8" SHWH Swage (Zinc) (Qty. 10) (237-5975-00) **and** 1/4" Slf. Rtn. Spacer White (Qty. 5 [I/O] / Qty. 4 [CPU]) (254-5007-05)

8L	Fluorescent Light Bracket *(Left Style)*	1	535-7739-00
8R	Fluorescent Light Brckt. *(Right Style)*	1	535-7739-01

Items 8L & 8R are secured to Item 1 by: #10-24 X 1-1/4" Carriage Bolt Square Neck (Qty. 2/per) (231-5012-00), #10-24 Keps Nut (Qty. 2/per) (240-5207-00) **and** 3/4" X 3" Reinforced Strapping Tape (Qty. 1, sold in 12" length only) (626-5040-00)

9	Fluorescent Lamp Holder (Socket)	2	077-5214-**01**

Item 9 is secured to Items 8L *and* 8R by: #6-32 X 5/8" PPH MS (Sems) Zinc (Qty. 1/per) (232-5203-00) Lock-In Fluor. Bulb with Yellow Socket Clip (Qty. 1/per) (**545-6271-00**)

10	Fluorescent Tube 24" (F20T9CW)	1	165-5061-00

Nr.	BACKBOX PARTS	QTY.	SPI PART Nr.
11	Starter - Fluorescent (FS2 Light)	1	165-5011-01
	Starter Base *(with leads)* [on Item 8L]	1	077-5213-00

Item 11 is secured to Item 8L by: #4-40 X 1/2" PPH MS (Sems) Zc. (Qty. 2) (237-5813-00)

12	Ballast Mounting Plate	1	535-8657-00
13	Ballast *CU452-W 1/2" Core 120v 60 Hz 13W*	1	010-5015-00

Items 12 & 13 are secured to Item 1 by: #8 X 1/2" SHWH AB (Zinc) (Qty. 2) (234-5101-00)
>>> CAUTION - VERY HOT" Decal (820-6266-00)
***EU / UK Only :** Ballast, 5/8" Core 50/60 Hz (010-5015-01)*

14	Ground Strap (5")	1	600-5006-05
15*	Roto Lock Male *(on Cabinet)*	1	355-5006-01
16	Roto Lock Female *(R2-0002-02)*	1	355-5006-02

Item 16 is secured by: #10-24 X 1-3/4" CBSN (231-5022-00), #10-24 Keps Nut (Qty. 2) (240-5207-00), #10-24 X 2" CBSN (231-5045-00) **and** #10 Washer 7/32" I.D. X .5" O.D. X 1/16" (Qty. 5) (242-5003-00); *See opposite next page.*

17	Lock Mounting Plate	1	535-0072-00
18	Lock 5/8" Barrel, 3/4"ø, 1.5" Flat Cam	1	355-5055-00

Items 17 & 18 are secured by: #8 X 1/2" TP Torx T20 Black (Qty. 2) (237-6173-05)

19	Back Vent Grill 2-1/2" X 18"	1	545-5072-02
20	Ribbon Cable, 20-Pin (3.5")	1	036-5000-350

Item 20 connects the I/O Pwr. Drvr. PCB to the CPU/Sound PCB; For 14-Pin see next page.

21	Button Hole Plug (Blk) (**Happ #52-6214-00**)	1	500-6566-00

Item 21** plugs the Access Hole required if using optional **BETAbrite Sign** or **Data cables.

22	Header Sign **TOURNAMENT PINBALL**	1	545-6133-00
23	Friction Hinge (Black) *behind* ▲▼	2	390-5053-00
24	Block / Sign & Hinge Stop (Black)	2	545-6174-00

Item 22 is sandwiched between Items 23 & 24 through 2 holes on each side. Item 23 is secured to Item 1 by: #8-32 X 3/8" PPH MS Ext. Sems (Zinc) (Qty. 2/per) (232-5301-00) **and Item 24 to Items 22-23 by:** #8 X 5/8" PPH AB Black (Qty. 2/per) (232-5101-01)

PARTS TABLE & VIEWS CONTINUED ON THE NEXT PAGE. ▶

Backbox [S.A.M. System] - Parts

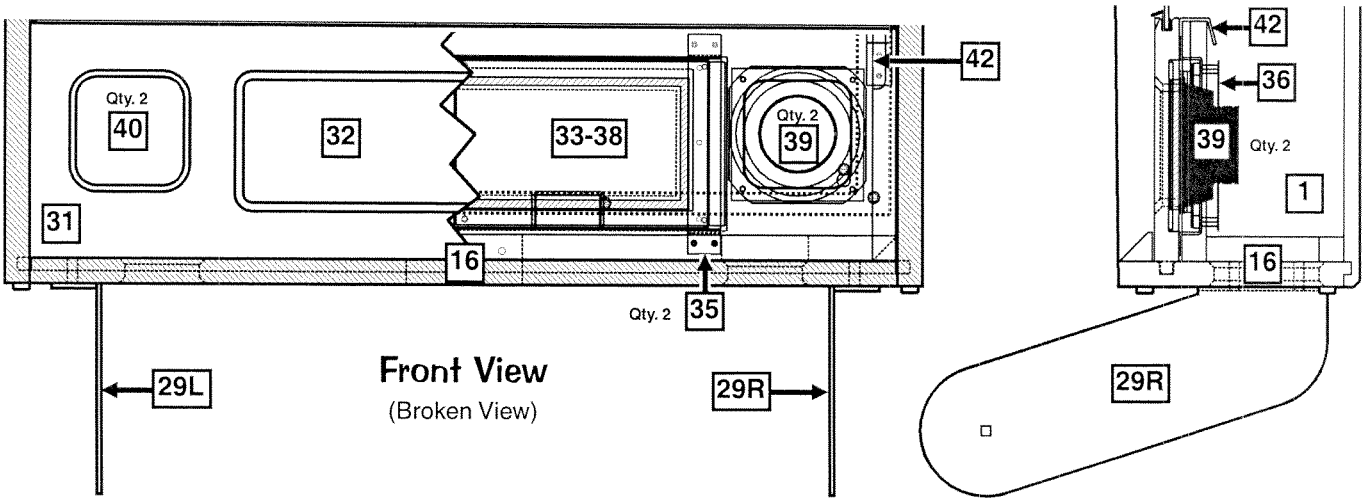

Speaker Panel [S.A.M. System] - Parts

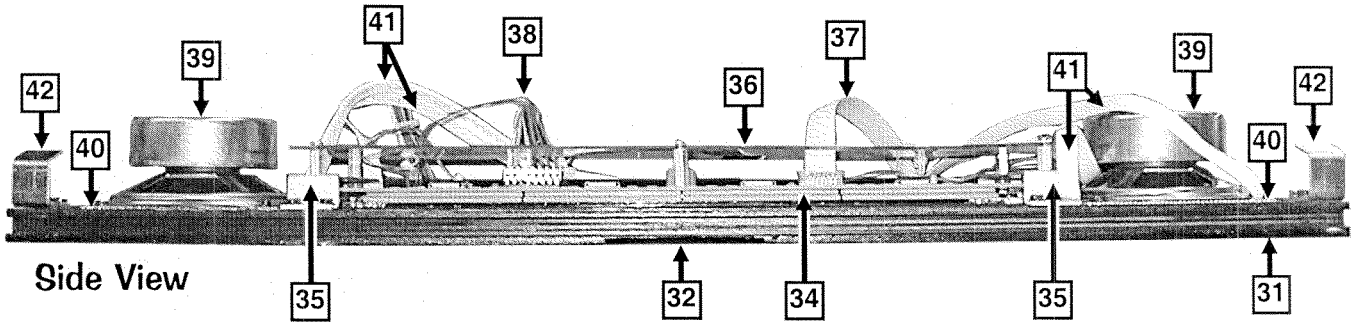

Nr.	BACKBOX PARTS	QTY.	SPI PART Nr.
	◀ *PARTS TABLE & VIEWS CONTINUED FROM THE PREVIOUS PAGE.*		
25	Braided Wire (1-1/2 Feet)	1	600-5001-00
	Item 25 is secured by: Staple 5/16" (Qty. 23) (631-5000-00)		
26*	Zip Cable Tie (Screw Down Style)	5	040-5005-00
	Item 26 is secured @ inside bot. by: #8 X 1/2" SHWH AB (Zinc) (Qty. 1/per) (234-5101-00)		
27	Clamps [Multiple Sizes]	32	040-5000-XX
	Item 27 secured by: #8 X 1/2" SHWH AB (Zinc) (Qty. 1/per) (234-5101-00) ***For the following sizes, replace** -XX **with:** **.1/4"** Double = -23 (Qty. 5); **1/2"** Single = -06 (Qty. 3); **3/4"** Single = -08 (Qty. 4); **1"** Single = -09 (Qty. 1); **1-1/4"** Double = -30 (Qty. 1)		
28	Foam 3/16" Thick X 1/4" Wide X 12"	3	626-5026-00
	Above Item 28 is self-adhesive. *17.5" strip on each side. Sold in 12" Lengths only.*		
29L	Pivot Hinge *(Left Style)*	1	535-7999-00
29R	Pivot Hinge *(Right Style)*	1	535-7999-01
	Items 29L-29R are secured to Backbox by: 1/4"-20 X 1-1/4" C.B. Sq. Neck (Qty. 4) (231-5003-00) **and** 1/4"-20 Flange Nut (Qty. 4) (240-5300-00) **Items 29L-29R are secured to Cabinet by:** Spacer Hex Nut 1/2" O.D. - 1/4-20 X 1/2" TD (Black) (Qty. 1/per) (254-5042-00), Nylon Spacer (Black) (Qty. 1/per) (242-5084-00), 1/4-20 X 1/2" Carriage Bolt Square Neck (Black) (Qty. 1/per) (231-5072-00) **and** Washer 1" O.D. X 1/2" I.D. X 1/16" (Black) (Qty. 1/per side, *only if required*) (242-5087-00)		
30*	Memory Stick USB 1.1+ [Generic] 64MB		970-0064-00
	Memory Stick USB 1.1+ [Generic] 128MB		970-0128-00
	Item 30 was not included with your game. Read the inside cover or go on-line for more info. To order with the latest game code copied onto it, add -A3 to the Part Nr. (**970-0128-00**-A3). File(s) can be downloaded from our website *(Files are 25MB or larger, DSL or Fast Modem recommended).* Not all manufacturers of Memory Sticks are compatible with our system. Test it out, if it doesn't work properly, return your purchase and order the memory stick through you local pinball distributor *(Stern Pinball Memory Sticks guaranteed compatible).*		

(ASM. REF. 505-6002-A3-A3, Items 1-42 Only, [29-30 not included in assembly])

Take Note:

* An asterisk (*) indicates item(s) are not noted in the pictorials.

Nr.	SPEAKER PANEL PARTS	QTY.	SPI PART Nr.
31	Speaker Panel (Black Wood)	1	525-5515-00
32	Plastic Shield (Display Front Cover)	1	545-5884-00
	Item 33 is secured to inside Item 31 by: #6 X 3/8" SHWH AB (Zinc) (Qty. 8) (234-5000-00)		
33*	Foam 3/16" Thick X 1/4" Wide X 12"	6	626-5026-00
	Above Item 33 is self-adhesive. *Located between Items 32-34. Sold in 12" Lengths only.*		
34	128 X 32 Dot Matrix Display PCB	1	520-5052-00
	// EURO ONLY RoHS // 128 X 32 DM CES PCB		520-5052-05
	// EURO ONLY RoHS // Dot Matrix Bezel		545-6281-00
	Item 34 is secured to Item 35 by *(at corners)*: 3/16" X 3/8" Spacer Gray (Qty. 4) (254-5000-18) **and** #6-32 X 1/2" SHWH Swage (Serr) Zinc (Qty. 4) (237-5976-03)		
35	Dot Matrix Display Mounting Bracket	2	535-8368-01
	Item 35 is secured to Item 31 by: #8 X 1/2" SHWH AB (Zinc) (Qty. 4/per) (234-5101-00)		
36	Plastic Shield (Display Back Cover)	1	830-6040-00
	Item 36 is secured to Item 34 by: 1/2" X 1/4" Hex Spacer #6-32 Tap (Qty. 4) (254-5008-03), 3/4" X 1/4" Hex Spacer #6-32 Tap (Qty. 2) (254-5008-04), #6-32 X 1/4" PPH MS (Sems) Zinc (Qty. 2) (232-5200-00) **and** #6-32 X 3/8" PPH (Qty. 6) (232-5201-00)		
37	Ribbon Cable, 14-Pin (33")	1	036-5260-33
	// EURO ONLY RoHS // LED Ribbon Cable Filter PCB		520-5259-00
	***Item 37 (14-Pin) connects the** 128 X 32 Dot Matrix Display PCB to the CPU/Sound PCB.*		
38	Display Cable *(Wiring Harness)*	1	036-5454-01
	// EURO ONLY RoHS // LED Display Adapter Harness		036-5520-00
39	Speaker (Shld.) 4" 8Ω #MG ELE 4060SH	2	031-5004-02
40	Speaker Grill *(Chrome w/no Artwork)*	2	535-8081-04
	Items 39-40 are secured by: #8 X 1/2" SHWH AB (Black) (Qty. 4/per) (234-5101-01)		
41	Ground Strap (25") [**2 per : Items 35 & 39**]	4	600-5006-25
42	Speaker Panel Hook Bracket	2	535-7009-02
	Item 42 is secured by: #8 X 1/2" SHWH AB (Zinc) (Qty. 2/per) (234-5101-00)		

(ASM. REF. 515-6888-05, Items 31-42 Only [includes wiring])

Nr.	BACKGLASS PARTS	QTY.	SPI PART Nr.
i*	Glass (Tempered) 25.906" X 19.187" X .125"	1	660-5038-02
ii*	24™ Film Art (#A7)	1	830-52A7-00
iii*	Top Plastic Channel - 26"	1	545-5018-15
iv*	Bottom Plastic Lift Channel - 26"	1	545-6313-01
v*	Plastic Edging (Left/Right) - 18-1/8"	2	545-5018-14
	Items i-v are secured to Item i by: 3M Tape (Double-Sided), 12" (Qty. 1) (626-5080-00) ***Note:** Only 6" required, sold in 12" lengths only.*		

(ASM. REF. 515-5450-00-A2 , Items i-v)

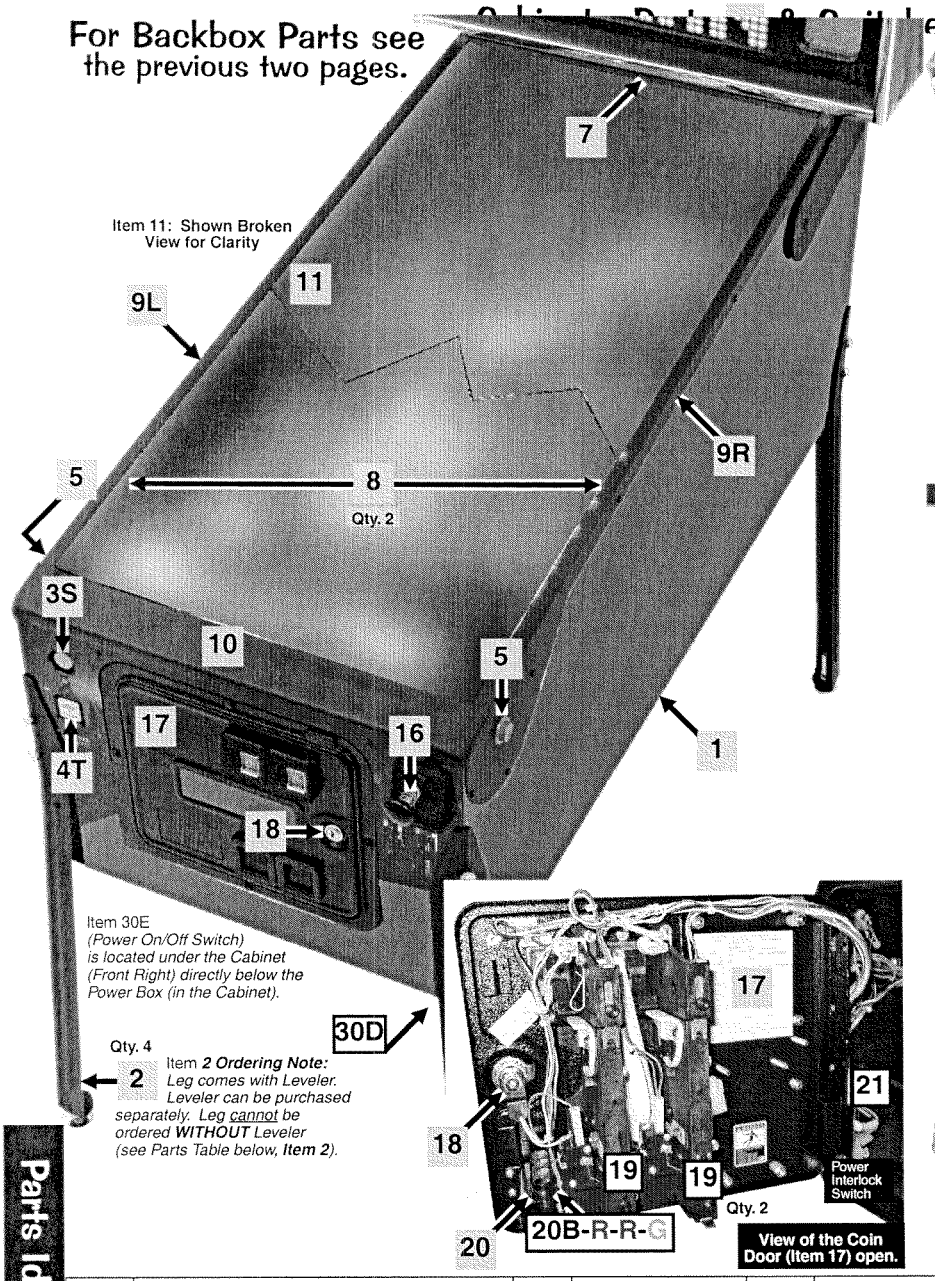

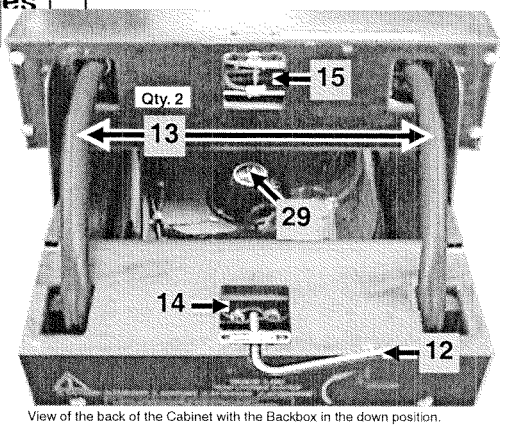

View of the back of the Cabinet with the Backbox in the down position.

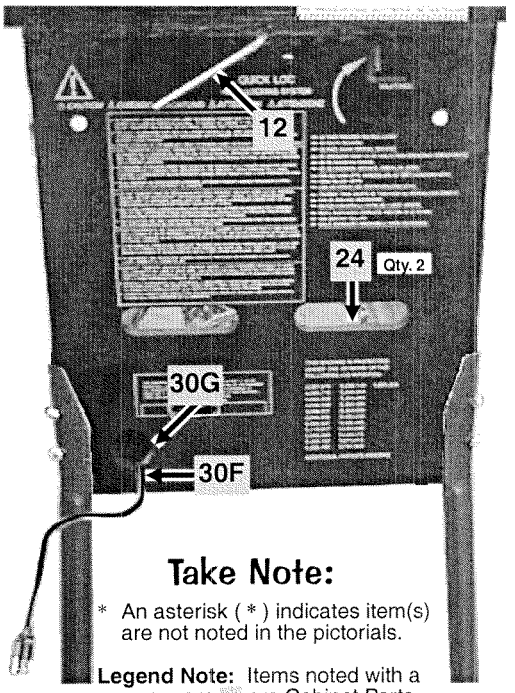

View of the Coin Door (Item 17) open.

Take Note:

* An asterisk (*) indicates item(s) are not noted in the pictorials.

Legend Note: Items noted with a cyan square are Cabinet Parts. Items noted with a white square ☐ are Switches.

Parts Identification

Nr.	CAB. PARTS & SWITCHES	QTY.	SPI PART Nr.
1	Screened Cabinet 24™ (No Parts)		525-5395-15P-A7
2	Black Leg with Leveler Asm.	4	500-5921-50
	Item 2 is secured by: Leg Bolt Back Plate (**535-5703-00**) **and** Leg Bolt 3/8" X 16 X 2-1/2" Hex 5/8" Hd. (2/per) (231-5001-01) *Leg Leveler **ONLY** (3/8"-16 X 3") (500-5017-00).*		
3S	**Start Button** (Green Round) with Sw. + Lamp	1	**500-6388-44-TL**
4T	**Tournament Button** (Yel. Sq.), w/Sw. + Lamp	1	**500-6587-06-TL**
	Item 3S & 4T includes the Switch & Lamp (No Wiring; desolder old wiring where required). *Switch or Bulb replacement:* ↻ ***TWIST*** ↺ ***LOCK (-TL) >> not snap-in <<*** ***Assembly Parts Included :*** Microswitch (**180-5174-00**); #555 Wedge Base Clear Bulb (**165-5002-00**); *If **4T** is not desired, use optional Button Plug Black (500-6566-00). Requires 3-Lug Terminal Strip (055-5204-03) and Diodes, 1N4004 (Qty. 2) (112-5003-00) inside cabinet under button(s) for **Lamp Operation** (Diode for Switch, located on Switch.)*		
5	**Flipper Button** (Red) Assembly (No Switch)	2	500-5026-32
	Item 5 is secured by: Pal Nut for Flipper Button (Metal) (Qty. 2/per) (240-5003-01) ***Pal Nut inside cabinet secured by:*** #8 X 1/2" SHWH AB (Zinc) (Qty. 1/per) (234-5101-00) **and** Washer (Zinc), .187" ID X .875" OD X .048" Thick (Qty. 1/per) (242-5059-00)		
6S	Flipper Switch Single Assembly	2	500-6889-01
	Assembly Parts Included : Flipper Switch Stack Single *(Paliney Contact)* (**180-5160-01**) **and** Capacitor - Ceramic .05 Mfd 25 volt (**130-5001-00**) **Item 6S/6D are secured to Cab. by:** #6 X 1-1/4 SHWH AB (Zinc) (Qty. 2/per) (237-5959-00)		
6D	Flipper Switch Double Assembly	0	500-6890-01
	Assembly Parts Included : Flipper Switch Stack Double *(Paliney Contact)* (**180-5164-01**) **and** Capacitor - Ceramic .05 Mfd 25 volt (**130-5001-00**) **Item 6S/6D are secured to Cab. by:** #6 X 1-1/4 SHWH AB (Zinc) (Qty. 2/per) (237-5959-00)		

Nr.	CAB. PARTS & SWITCHES	QTY.	SPI PART Nr.
7	Rear Glass Channel 20-3/8" Length	1	545-5038-00
8	Plastic Channel 42-5/8" Lg. (Left/Rt.)	2	545-5017-00
9L	Side Armor (Left) with Button Guard	1	535-9596-00
9R	Side Armor (Right) with Button Guard	1	535-9596-01
	Items 9L & 9R are secured @ front & side by: Pem Stud 1/4 X 1" Flange Head Black (Qty. 1/per) (237-6116-01), 1/4-20 Flange Nut (Qty. 1/per) (240-5300-00) **and** #8 X 1/2" T20 Tamper Proof Black (Qty. 5/per) (237-6173-05); **@ rear (backbox) by:** #10-24 X 1" Sq. Neck Carrg. Bolt Black (Qty. 1/per) (231-5021-00) **and** #10-24 Hex Nut (Qty. 1/per) (240-5202-00)		
10	Front Molding (Black) < NO BUTTON HOLE >	1	**500-6882-02-00**
	Item 10 includes: Self-Adhesive Foam Rubber 3/8" X 3/16" X 20-3/8" (3') (626-5001-00) *Items **10** works with Item **22 (next page)** ONLY.*		
11	Playfield Glass (Tempered) 21" X 43" X 3/16"	1	660-5001-00
12	Hex Key Allen Wrench 5/16"	1	777-0001-00
13	Corrugated Tubing Black **1"ø X 2.6' Lg.**	1	605-5008-03
	***Above Item 13** covers the Cable Wiring Harnesses going into the Backbox from the Cabinet.*		
14	Roto Lock Male (R2-0055-02)	1	355-5006-01
	Item 14 is secured by: #10-24 X 1-3/4" Carriage Bolt Square Neck (Qty. 2) (231-5022-00), #10-24 Nylon Stop Nut (Qty. 2) (240-5206-00) **and** #10 Washer, 7/32" ID X 1/2" OD X 1/16" Thick (Qty. 2) (242-5003-00)		
15	Roto Lock Female *(on Backbox)*	*1*	*355-5006-02*
16	Ball Shooter (Plunger) Assembly	1	**500-6146-00-04**

PARTS TABLE & VIEWS CONTINUED ON THE NEXT PAGE. ▶

Cabinet - Parts ▩ & Switches ☐ Continued

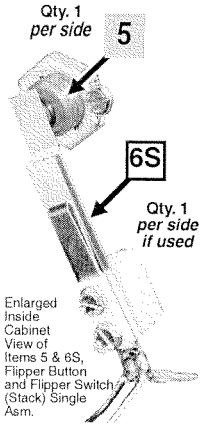

Enlarged Inside Cabinet View of Items 5 & 6S, Flipper Button and Flipper Switch (Stack) Single Asm.

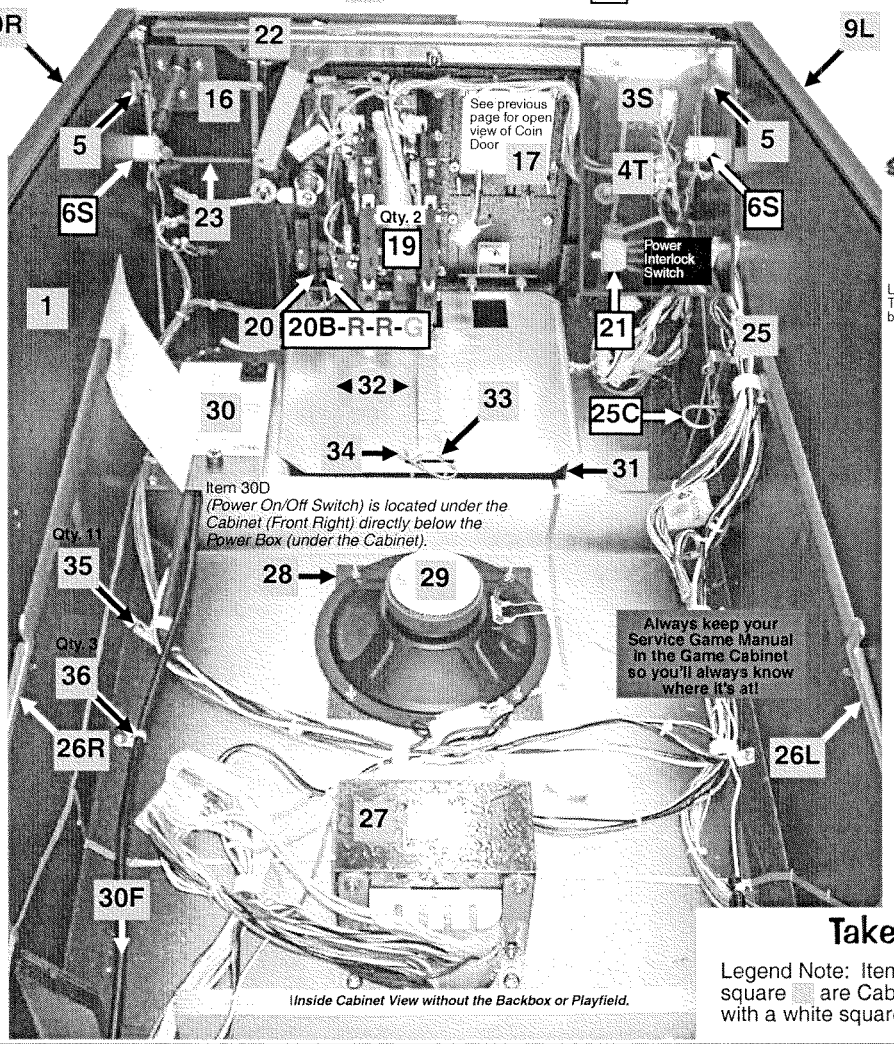

Inside Cabinet View without the Backbox or Playfield.

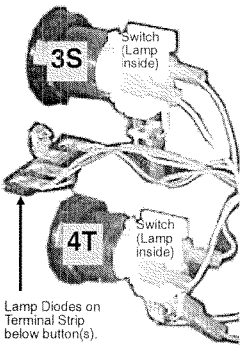

Lamp Diodes on Terminal Strip below button(s).

Enlarged Inside Cabinet View of Items 3S, 4T and 25 (25B, 25C, 25H & 25W), Plumb Bob Tilt Switch.

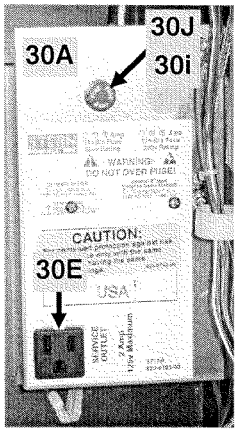

Enlarged Inside Cabinet View of Items 30, Power Box (30A), Service Outlet (30E), Fuse (30i) and Fuse Holder (30J).

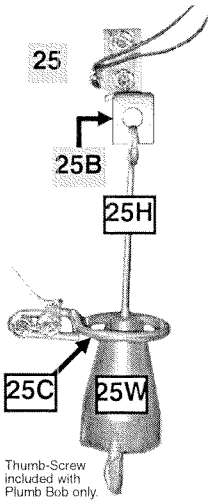

Thumb-Screw included with Plumb Bob only.

Take Note:

Legend Note: Items noted with a cyan square ▩ are Cabinet Parts. Items noted with a white square ☐ are Switches.

Nr.	CAB. PARTS & SWITCHES	QTY.	SPI PART Nr.
◄ *PARTS TABLE & VIEWS CONTINUED FROM THE PREVIOUS PAGE.*			
17	Coin Door 2-Cht SV Up-Stk. 4-Button Bracket	1	501-5018-172
	Item 17 is secured by: 1/4"-20 X 1-1/4" Carriage Bolt Square Neck (Qty. 4) (231-5003-00) 1/4"-20 Flange Nut (Qty. 4) (240-5300-00) **and** Fend Washer 1/4" I.D. X 1" O.D. (Qty. 3) (242-5009-00) ***Note:*** *For Coin Door other than USA call Technical Support for SPI Part Nr.*		
18	Lock 7/8" Barrel, 435X, Offset Cam	1	**355-5021-03K**
19	Coin Door Switch (USA) (Happ)	2	180-5024-**01**
	ALT. SW.: **19C:** Coin Door Switch (USA) (Coin Control) (**180-5024-00**) **ALT. SW.:** **19J:** Coin Door Switch (¥ Japan) (**180-5091-00**)		
20	4-Button Bracket *(for Service Menu Buttons)*	1	535-6860-04
	SWITCH: **20B:** Push-Button Service Switch (**Black**) (**180-5192-00**) **SWITCH:** **20R:** Push-Button Service Switch (Red) (Qty. 2) (**180-5192-02**) **SWITCH:** **20G:** Push-Button Service Switch ( ) (**180-5192-04**)		
	Ordering Note: *Securing hardware for switches included. Decal in kit sold separately.*		
21	Power Interlock-Memory Protect Switch Asm.	1	500-5808-05
	Assembly Parts Included : Mounting Bracket (**535-9794-00**), Power Interlock (Playfield) Switch (**180-5136-00**) **and secured by:** #8 X 1/2" SHWH AB (Zinc) (Qty. 2) (234-5101-00)		
22	Front Molding Lockdown Asm.	1	500-6881-00
	Item 22 is secured by: #10-24 X 1-1/4" Carr. Bolt (Qty. 2) (231-5012-00) **and** #10-24 Keps Nut (Qty. 2) (240-5207-00)		
23	Lockdown Spring *(connected to handle)*	1	265-5008-00
	Item 23 is secured by: #8 X 1/2" SHWH AB (Zinc) (Qty. 1) (234-5101-00) **and** #10 Washer, 7/32" ID X 1/2" OD X 1/16" Thick (Qty. 1) (242-5003-00)		
24	Grills 2-1/2" X 18" *(on Back & Bottom)*	2	545-5072-02
25	Plumb Bob Tilt Switch *Indivual Parts Only*		***Ind. Parts Only***
	SWITCH: **25B:** Bracket for Hanger Wire (**535-5221-00**) **25C:** Contact Wire Form (**535-7563-01**) **25H:** Hanger Wire (**535-5319-02**) **25W:** Plumb Bob Weight (**535-5029-00**) *(includes Thumb-Screw)*		
	Item 25B is secured to Cabinet by: #6 X 5/8" SHWH AB (Zinc) (Qty. 4) (234-5002-00)		
26L	Slide & Pivot Support Bracket (Left)	1	535-5989-00
26R	Slide & Pivot Support Bracket (Right)	1	535-5990-00
	Items 26L & 26R are secured by: #10-24 X 1-1/4" Carriage Bolt Square Neck Black (3/per) (231-5012-00) **and** #10-24 KEPS Nut (3/per) (240-5207-00)		

Nr.	CAB. PARTS & SWITCHES	QTY.	SPI PART Nr.
27	Transformer 5.7VAC *(with Ballast Winding)*	1	010-5012-01
	Item 27 is secured by: 1/4"-20 X 5/8" PPH MS (Zinc) (Qty. 4) (237-5854-00) **and** 1/4" Split Lock Washer (Qty. 4) (244-5000-00)		
28	Woofer (Speaker) Grill 7" X 7"	1	545-5072-03
29	Woofer 8" ø Round 8010 4Ω	1	031-5007-01
	Items 28 & 29 are secured by: #6-32 X 1-1/4" Fin Shank Screw (Qty. 4) (237-5883-00) **and** #6-32 Keps Nut (Qty. 4) (240-5008-00)		
30	Power Input Box Asm. + Univ. Cable	1	515-5360-08
	30A: Power Box *(No Parts)* Mounting Frame (**535-5932-00**) **30B*:** Line Filter (**150-5000-00**) **30C*:** Varistor* TNR159211KM (Domestic) (**150-5001-00**) *or* Varistor TRM15G431KM (Euro) (**150-5002-00**) SWITCH: **30D:** On/Off Rocker Switch + Bracket Assembly (**515-7085-00**) ***30D incl.:*** Switch, APEM R2101C5NBB (**180-5001-03**) + Bracket (**535-8318-00**) **30E:** Service Outlet (3-Prong / US) (**180-5008-01**) / International N/A **30F:** Line Cord 10' ROJ 3" + Ring Terminal Asm. (**515-6566-00**) **30G:** Recessed (Black) Cup *(rear of Cabinet)* (**545-5122-00**) **30H*:** Snap Bushing 9/16" (White) (**280-5001-01**) **30i:** Fuse 8 Amp 250V Slo-Blo (Domestic) (**200-5000-05**) *or* Fuse 5 Amp 250V Slo-Blo (International) (Qty. 2) (**200-5003-00**) **30J:** Fuse Holder (**205-5001-00**)		
	Universal Cable & Jumper Caps *(all voltage variations): See the Yellow Pages, Page y 10.*		
31	Cash Box Plastic Bottom	1	545-5090-00
32	Cash Box Cover (Validator)	1	535-5013-03
33	Cash Box Lock Bracket (U-Wire)	1	535-7562-00
	Item 33 is secured by: #8 X 5/8" HWH AB (Green) (Qty. 2) (234-5102-04)		
34	Large Hair-Pin Clip	1	535-7772-00
35	Clamps [Multiple Sizes]	12	040-5000-**XX**
	Item 35 is secured to Item 1 by: #8 X 1/2" SHWH AB (Zinc) (Qty. 1/per) (234-5101-00) ***For following sizes, replace -XX with:*** 3/4" Single = -08 (Qty. 9); 1-1/2" Single = -10 (Qty. 3)		
36	Zip Cable Tie (Screw Down Style)	3	040-5005-00
	Item 36 is secured by: #8 X 1/2" SHWH AB (Zinc) (Qty. 1/per) (234-5101-00)		
37†	Meter +12VDC ***with*** *Bracket Optional*	*opt.*	**G-0053-013-102**
	† *Meters (Diode included) are optional and were not included in this Pinball Machine. Order without the bracket use* ***G-0053-013-102A****. More information or Qs? Call Technical Support.*		

Parts Identification

Main Playfield Top - Miscellaneous Parts and Brackets

Nr.	THE PLAYFIELD	QTY.	SPI PART Nr.
Main P/F	P/F Screened w/ Inserts & NO Parts	1	830-5100-A7
	P/F Complete w/ Inserts & ALL Parts	1	505-6004-A7-A7

Nr.	MISC. PARTS (ABOVE)	QTY.	SPI PART Nr.
1	Arch (Black Metal) [*no Forks*]	1	535-8392-01
	Item 1 is secured to Item 9 below by: #10-32 X 5/16" PFH U/C MS (Zinc) (Qty. 2) (237-6013-00) ***Usage Note:*** *When replacing the Arch,* order new replacement **Nelson Protect Strips 7-5/8"** *(not included)* (Qty. 2) (545-5212-04; use -02 for 8-9/16" size) *For Decals, see* ***Playfield Top - Plastics Kit, Decals & Mylar Kits.***		
2	Inst. Card [Eng./Spanish] 24™	1	755-51A7-12-Y
	Note : Visit ***www.sternpinball.com*** *for a PDF copy of the Game Instruction Card which will also have any translated Instruction Cards made for this game. Find Game Link or Archives.* ***Spanish*** *755-51A2-**12**-Y;* ***German*** *755-51A2-**03**-Y;* ***Italian*** *755-51A2-**04**-Y;* ***French*** *755-51A2-**05**-Y.*		
3A	Coin Card (2-Sided) USA 10 Default	1	755-5400-11-Y
3B	Coin Card (2-Sided) USA 5	1	755-5400-08-Y
3C	Coin Card (2-Sided) *Blank for Custom*	1	755-5400-04-Y
	For Coin Card views, see below or ***online :*** *http://www.sternpinball.com/coinagecards.shtml*		
	Ordering Note : *If this is a non-US Game, Coin Card(s) Part Numbers provided will differ.*		

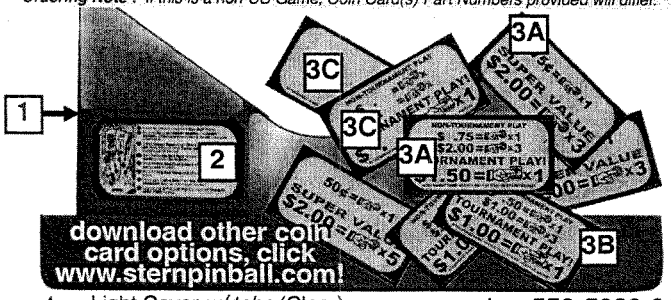

4	Light Cover *w/ tabs* (Clear)	1	550-5030-01
4R	Light Cover *w/ tabs* (Red)	2	550-5031-02
4A	Light Cover *w/ tabs* (Amber)	4	550-5031-03
5	Light Reflector (Silver Plst.) REF540N	4	545-5409-01
6	Gate Assembly	1	535-6490-04-A
7	Bubble Level Assembly	1	500-6815-00
	Assembly Parts Included **: Level** 8mm Empire #0224 **(545-6001-01)** or **Level Mount** (545-6068-00). **Flange secured by:** #6-32 X 1/4" PPH MS (no Sems) Zinc (237-5500-00) **and** #6-32 Keps Nut (240-5008-00) **Item 7 is secured to the Wood Rail by:** #6 X 1-3/4" PPH AB (Zinc) (Qty. 2) (232-5009-00)		
8	Pinball (Steel) 1-1/16" ø	4	260-5000-00

Nr.	MISC. BRACKETS (ABOVE)	QTY.	SPI PART Nr.
9	Shooter Ramp (Shooter Lane)	1	535-8145-00
10	Bracket, Playfield Hanger	2	535-8385-00
	Item 10 is secured to the Playfield (P/F) by: #8-32 X 7/8" Unslotted HWH MS Zinc (Qty. 2/per) (237-5890-00) **and** #8-32 T-Nut (Qty. 2/per) (240-5101-00)		
11	Bracket, Arch Retaining (Hold-Down)	2	535-8394-00
	Item 11 is secured to the P/F by: #8 X 1/2" SHWH AB (Zinc) (Qty 3/per) (234-5101-00)		
12	Gate Assembly	1	515-6556-01
13	Spinner Assembly	1	515-7649-00
14	Gate Assembly	1	535-6556-03-A

Nr.	MISC. PARTS	QTY.	SPI PART Nr.
15	Safe House Figurine	2	545-6319-02
16	Snipper House Figurine	1	545-6319-00

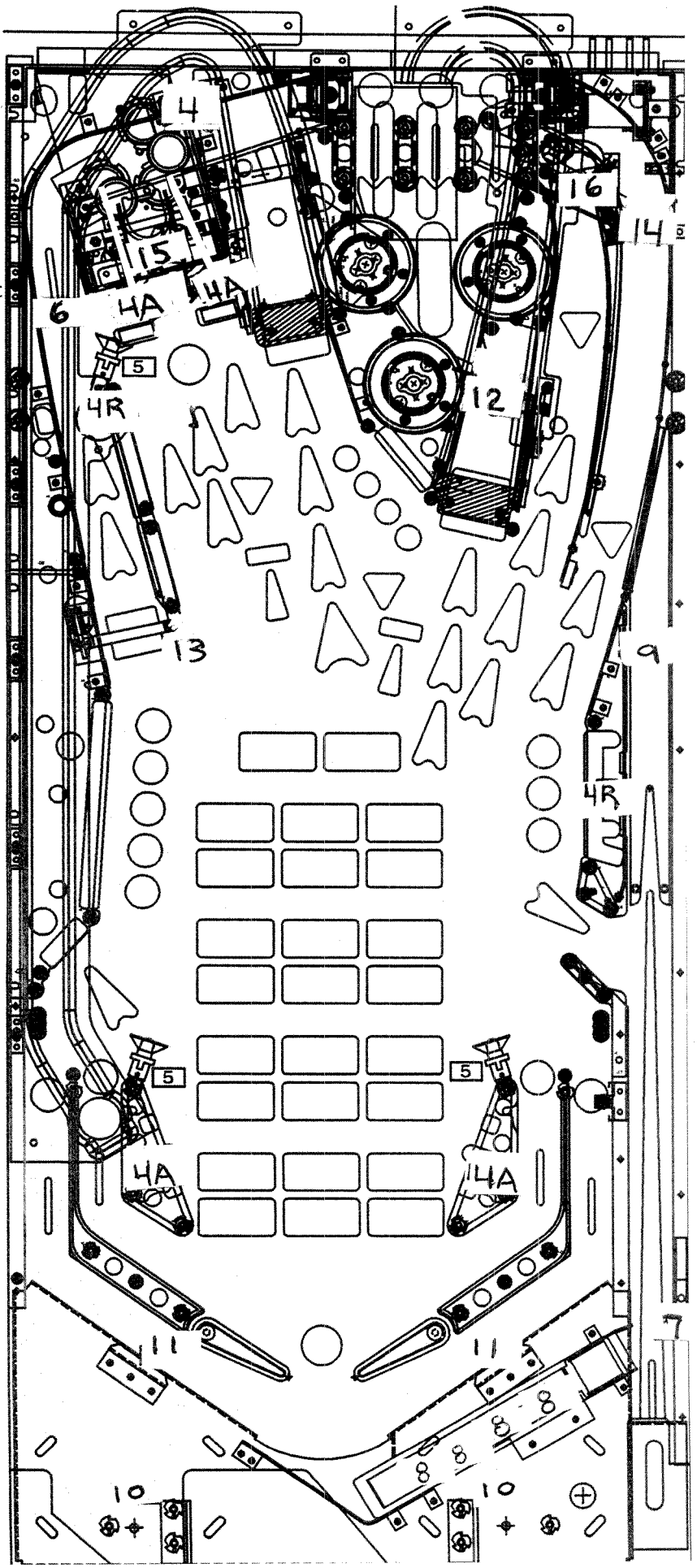

Parts Identification

Main Playfield Bottom - Miscellaneous Parts ■ and Brackets ▩

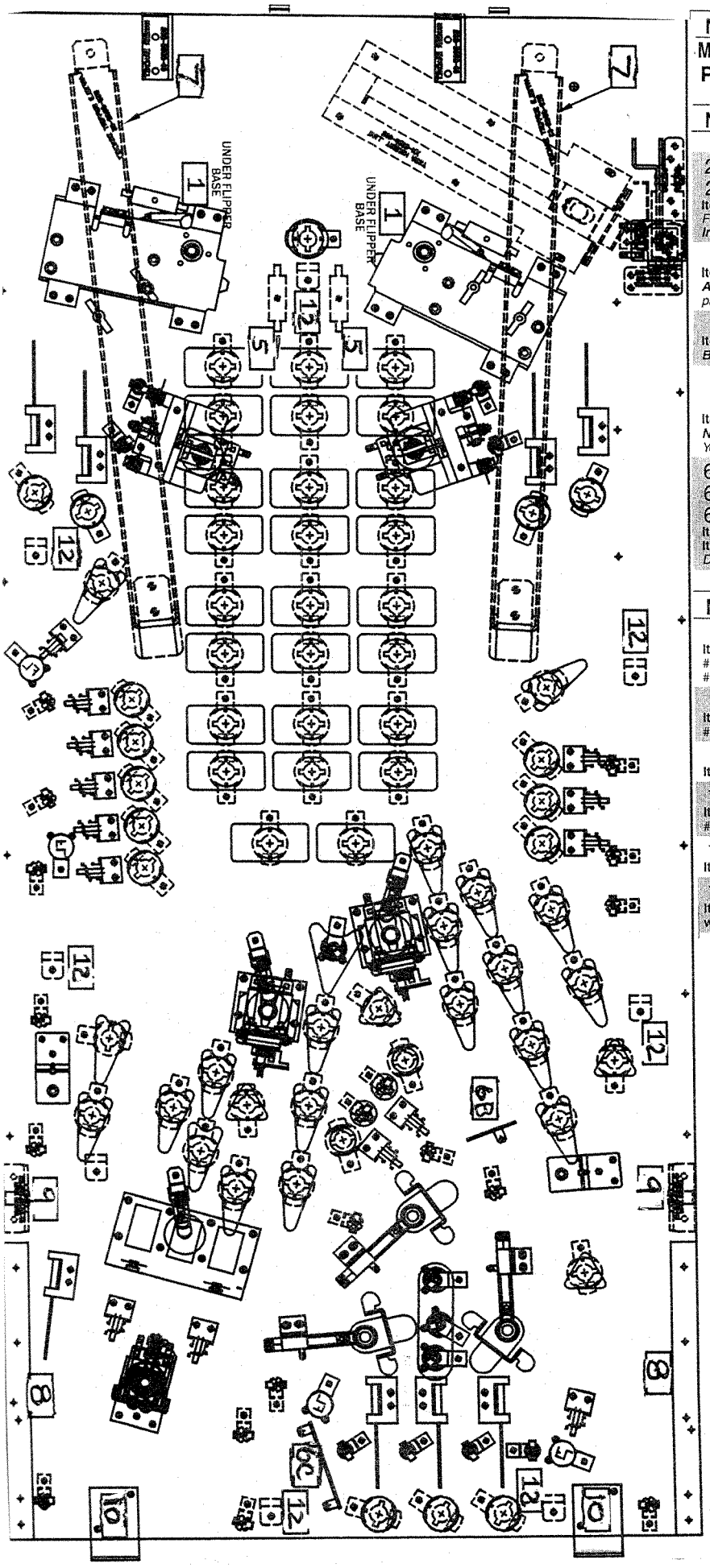

Nr.	THE PLAYFIELD	QTY.	SPI PART Nr.
Main P/F	P/F Screened **w/** Inserts & **NO** Parts	1	830-5100-A7
	P/F Complete **w/** Inserts & **ALL** Parts	1	**505-6004-A7-A7**

Nr.	MISC. PARTS (BELOW)	QTY.	SPI PART Nr.
1	Insulation Fiche Paper (under Lower Flippers)	2	545-5721-00
2c	Relay + Conn. Asm.	0	511-5181-00
2s	Relay + Conn. Asm.	0	511-5181-**01**

Item 2 is secured by: #6 X 1/2" SHWH AB (Zinc) Red (Qty. 2/per) (234-5001-02)
*For more details on Items **2C & 2S**, see the Yellow Pages, Backbox Wiring, Page **y 3**.*
Individual Part Reference Only: *Relay Picker #PC113-2C-C1-24D-LD-X (190-5004-00)*

3	PCB, OPTO Transceiver Amplifier	0	520-5239-01

Item 3 is secured by: #6 X 3/4" SHWH AB (Zinc) (Qty. 4) (234-5003-00)
Application Note : *Required for OPTO Transceiver Pairs (500-6775-01) listed on the next page (... Switches). See the Yellow Pages, PCBs, Pages **y 42 – y 43**.*

4	Resistor, 10W 5Ω RJ X4 RCD K5-451	0	121-5000-00

Item 4 are soldered to Item 4A (Qty. 2). *For more details on Item **4**, see the Yellow Pages, **Backbox Wiring**, Page **y 3**. To order **Item 4** X4 soldered to Terminal Strip, use **511-5200-00**.*

5	3A 250v Slo-Blo Fuse	2	200-5000-08
	Fuse Clip Holder (Socket)	1	205-5000-01

Item 5 is secured by: #6 X 1/2" PPH AB (Qty. 1/per) (237-5805-00)
Note: *Item **5**, Fuse Clip Holder (Socket) 205-5000-01 is part of a set of 12 (205-5000-12). You can order them as individuals (...-01) or a set of 12 (...-12).*

6A	Diode Terminal Strip 2-Lug (810) Isolated	0	055-5203-00
6B	Diode Terminal Strip 3-Lug (813) Isolated	1	055-5204-03
6C	Diode Terminal Strip 5-Lug (824) Isolated	1	055-5204-05

Items 6B–6C are secured by: #6 X 3/8 HWH AB Zinc (Qty. 1-2/per) (234-5000-00)
Item 6B (Qty. 1) located in Cabinet. ***Note:*** *1N4004 Diodes **(112-5003-00)** are used in all Diode applications. 1N4001 Diodes can be used for Switches and/or Lamps.*

Nr.	MISC. BRACKETS (BELOW)	QTY.	SPI PART Nr.
7	Bracket, Playfield Support Slide	2	535-6862-05

Item 7 is secured by: #10 X 1/2" HWH A (Zinc) (Qty. 2/per) (237-5817-00), #8-32 X 5/8" SHWH Swage (Zinc) Wax (Qty. 1/per) (237-5975-03) **and** #8-32 T-Nut (Qty. 1/per) (240-5101-00)

8	Bracket, Edge Slide (Extended)	2	535-5988-01

Item 8 is secured by: #4 X 1/2" PFH (Zinc) (Qty. 5/per) (237-5840-00) **and** #8-32 T-Nut (Qty. 2/per) (240-5101-00)

9	Bracket, Pivot Pin Welded Assembly	2	500-5329-03

Item 9 is secured by: #8-32 X 5/8" SHWH Swage (Zinc) Wax (Qty. 2/per) (237-5975-03)

10	Bracket, Back Panel Mounting	2	535-8964-00

Item 10 is secured by: #8 X 1/2" SHWH AB (Zinc) (Qty. 2/per) (234-5101-00) **and** #8-32 T-Nut (Qty. 2/per) (240-5101-00) ***For a 3D View :*** *See the Blue Pages, Page **b 23**.*

11	Bracket, Hole Protect *(center up-post)*	0	535-0289-00

Item 11 secured under the playfield by: #8 X 1/2" SHWH AB (Zinc) (Qty. 2) (234-5101-00)

12	Tie Post (White Nylon) 3-1/2"	22	545-5253-01

Item 12 is secured by: #6 X 5/8" SHWH AB Green (Qty. 1/per) (234-5002-00) **and wiring with** Cable Tie, 5-1/2" (Qty. 1/per) (040-5001-02)

Playfield - Metal Posts & Fin Shank Screws (Actual Size) †

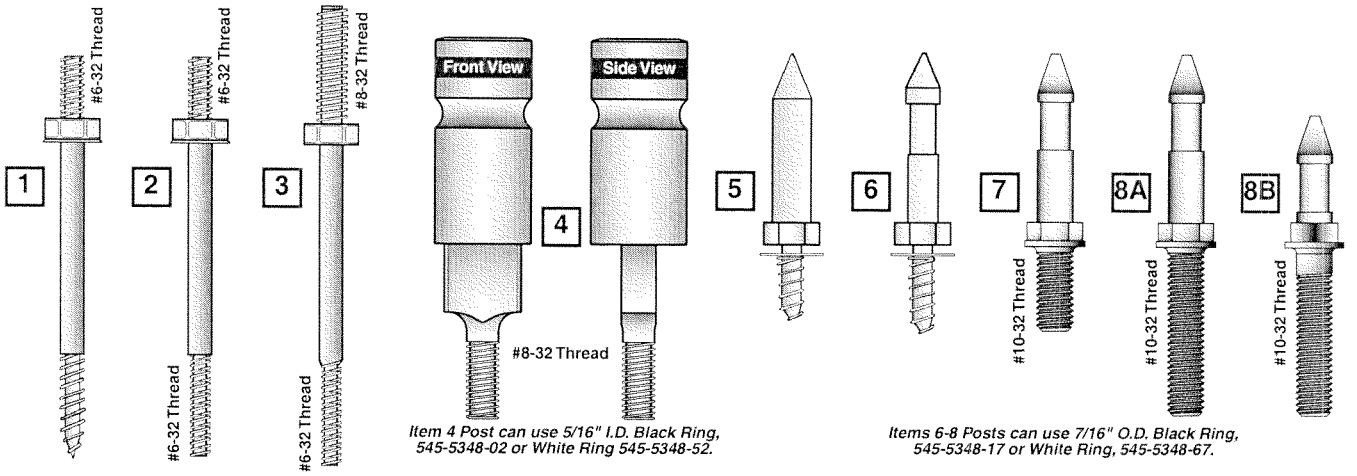

Item 4 Post can use 5/16" I.D. Black Ring, 545-5348-02 or White Ring 545-5348-52.

Items 6-8 Posts can use 7/16" O.D. Black Ring, 545-5348-17 or White Ring, 545-5348-67.

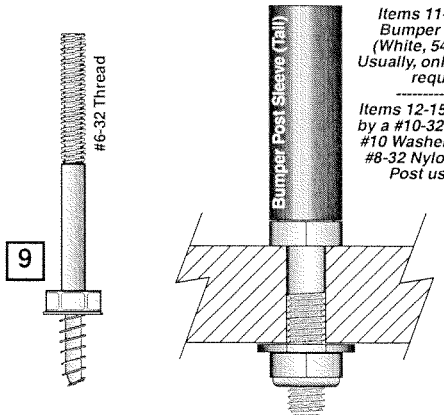

Items 11-16 & 18 Posts can use a Black Bumper Post Sleeve (Tall), 545-5308-00 (White, 545-5308-08 or Red, 545-5308-22) Usually, only Posts which are in the ball path require a Bumper Post Sleeve.

Items 12-15 & 18 Posts are typically secured by a #10-32 Nylon Stop Nut, 240-5203-00 and #10 Washer, 242-5010-00 (Item 11 Post use a #8-32 Nylon Stop Nut, 240-5102-00; Item 16 Post use a #8-32 T-Nut, 240-5101-00).

A & B ***Items A & B Note:*** *Typically used to secure Hex Spacers onto the Playfield Wood or Back Panel.*

C ***Item C Note:*** *Quantity 4 on bottom Cabinet Speaker Grill (Qty. 4) (also requires #6-32 Nylon Stop Nut, 240-5005-00).*

D ***Item D Note:*** *Quantity 3/per on the Coil Bracket Welded Assembly (515-5939-00) in the Bumper Bottom Assembly (515-6459-04).*

A - D ***Items A-D Note:*** *The "Fins" keep the screw from turning inside the wood hole.*

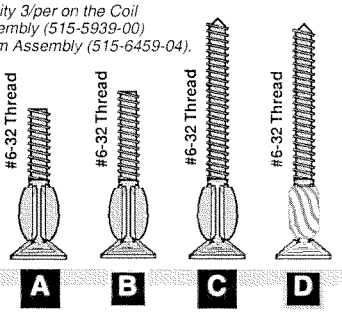

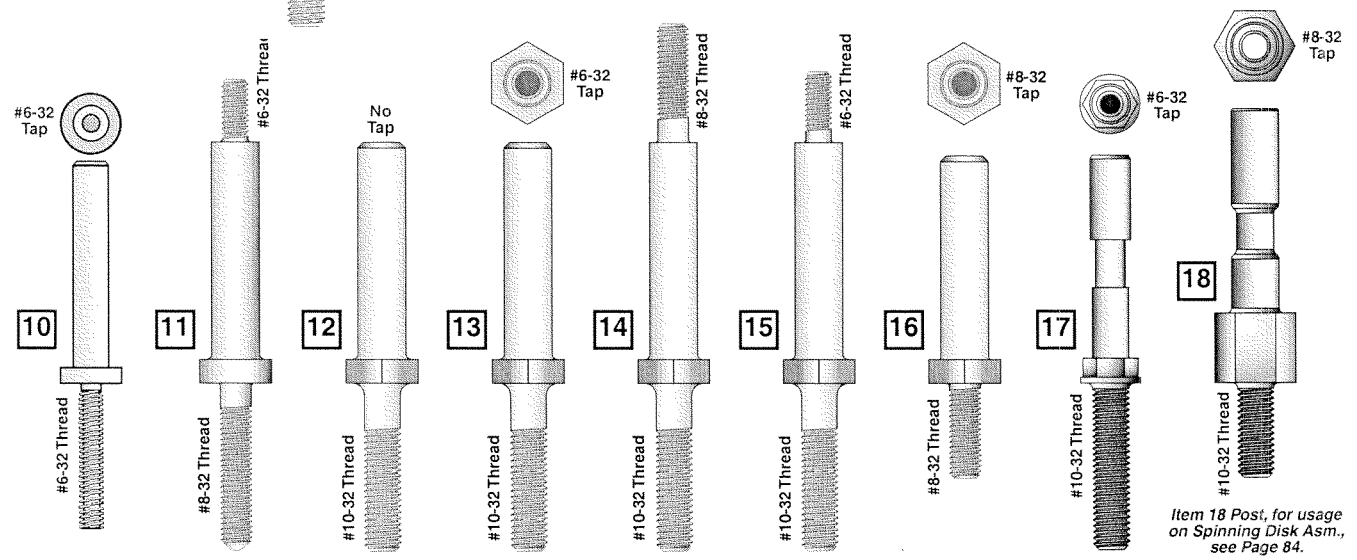

Item 18 Post, for usage on Spinning Disk Asm., see Page 84.

Parts Identification

Nr.	METAL POSTS	SPI PART Nr.
1	Post [Fasten] #6-32 Thread // Wood Screw	530-5010-02
2	Post [Fasten] #6-32 Thread // #6-32 Thread	530-5012-02
3	Post [Fasten] #8-32 Thread // #6-32 Thread	530-5008-00
4	Post Brass [Adjustable, Sliding] #8-32 Thread	530-5621-00
5	Mini-Post Wood Screw (no cut-away)	530-5004-01
6	Mini-Post Wood Screw	530-5004-00
7	Mini-Post Machine Scr. // #10-32 .4" Thread	530-5005-01
8A	Mini-Post MS // #10-32 .875" Thread	530-5005-00
8B	Mini-Post Short MS // #10-32 .875" Thread	530-5749-00
9	Post [Fasten] #6-32 Thread // Wood Screw	530-5263-01
10	Post #6-32 Tap // #6-32 Thread	530-5127-00
11	Post [Fasten] #6-32 Thread // #8-32 Thread	530-5007-00

Nr.	METAL POSTS	SPI PART Nr.
12	Post [Hex Base] NO TAP // 10-32 Thread	530-5332-00
13	Post [Hex Bs.] #6-32 TAP // #10-32 Thread	530-5332-01
14	Post [Hex Bs.] #8-32 Thread // #10-32 Thr.	530-5332-02
15	Post [Hex Bs.] #6-32 Thread // #10-32 Thr.	530-5332-03
16	Post [Hex Bs.] #8-32 TAP // #8-32 Thread	530-5332-04
17	Post [Hex Bs.+Groove] #6-32 TAP // #10-32 Thr.	530-5679-00
18	Post [Hex Bs.+Groove] #8-32 TAP // #10-32 Thr.	530-5753-00

Nr.	FIN SHANK SCREWS	SPI PART Nr.
A	#6-32 X 3/4" Fin Shank Screw	237-5921-02
B	#6-32 X 7/8" Fin Shank Screw	237-5921-04
C	#6-32 X 1¼" Fin Shank Screw	237-5883-00
D	#6-32 X 1 3/16" Spiral Fin Shank Screw	237-5957-00

NOT ALL PARTS LISTED ABOVE ARE USED ON THIS GAME (QUANTITIES PER GAME WILL DIFFER). COMPARE ACTUAL PART ON GAME TO ABOVE DRAWINGS TO IDENTIFY THE PART NUMBER REQUIRED.

Playfield - Nylon Stop, KEPS, Hex, T-, Flange, Pal* & Wing Nuts* (Actual Size) †

Nr.	NYLON STOP NUTS*	SPI PART Nr.
N1	#6-32 Nylon Stop Nut	240-5005-00
N2	#6-32 N.S. Nut *(with 1/4" Hex Body)*	240-5010-00
N3	#8-32 Nylon Stop Nut	240-5102-00
N4	#10-32 Nylon Stop Nut	240-5203-00
N5	#10-24 Nylon Stop Nut	240-5206-00
	*Item **N5** used with #10-24 X 1-3/4" Carriage Bolt Square Neck Black (231-5022-00) located in the Cabinet for the Roto Lock (Male) (355-5006-01).*	
N6	#4-40 Nylon Stop Nut	240-5303-00
N7	#4-40 *(18/8 Stainless)* Nylon Stop Nut	240-5303-01
N8	5/16"-18 Nylon Stop Nut	240-5316-00

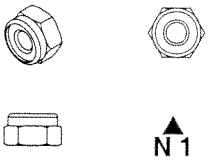

Nr.	KEPS NUTS*	SPI PART Nr.
K1	#6-32 Keps Nut *(with Star Washer)*	240-5008-00
K2	#6-32 Keps Nut *(with 1/4" Hex Body)*	240-5011-00
K3	#8-32 Keps Nut	240-5104-00
K4	#10-32 Keps Nut	240-5208-00
K5	#10-24 Keps Nut	240-5207-00
K6	#4-40 Keps Nut	240-5318-00

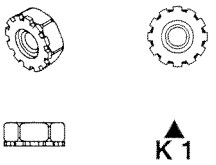

Nr.	HEX NUTS*	SPI PART Nr.
H1	#6-32 Hex Nut *(No Star Washer)*	240-5004-00
H2	#8-32 Hex Nut	240-5103-00
H3	#10-32 Hex Nut	240-5201-00
H4	#10-24 Hex Nut	240-5202-00
	*Item **H4** used with #10-24 X 1" Carriage Bolt Square Neck Black (231-5021-00) located in the Cabinet for the Side Armor Rear (towards Backbox).*	
H5	#10-32 X 3/8" Hex Nut	240-5209-00
H6	3/4-16 Hex Nut	240-5315-00
H7	#2-56 Hex Nut	240-5301-00
H8	7/8"-14 Hex Nut	240-5317-00

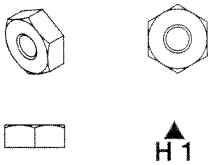

Nr.	T-NUTS*	SPI PART Nr.
T1	#6-32 T-Nut	240-5002-00
T2	#6-32 T-Nut *(with Side Cut Off)*	240-5002-01
T3	#8-32 T-Nut	240-5101-00
T4	#10-32 *(Black Oxide)* T-Nut	240-5007-00
T5	#10-32 T-Nut *(with Side Cut Off)*	240-5205-00
T6	#10-32 X 5/16" 3-Prong T-Nut	240-5204-00
T7	#10-24 T-Nut	240-5200-00

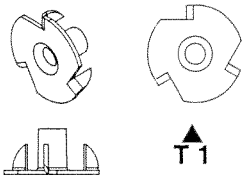

Nr.	FLANGE NUT*	SPI PART Nr.
F1	1/4" X 20 Flange Nut	240-5300-00
	*Item **F1** used with 1/4-20 X 1-1/4 Sq. Neck Carriage Bolt Black (231-5003-00) located in the Cabinet for the Side Armor (Front) and Pivot Hinges.*	

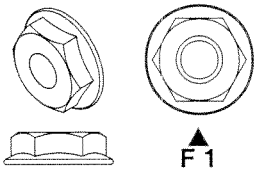

Nr.	PAL NUTS*	SPI PART Nr.
P1	Plastic Pal Nut *(on Flipper Buttons)*	240-5003-00
P2	Metal Pal Nut *(on Flipper Buttons)*	240-5003-01

* *Not Shown*

Nr.	WING NUTS*	SPI PART Nr.
W1	#6-32 Wing Nut	240-5001-00
W2	#8-32 Wing Nut	240-5100-00
W3	#10-24 Wing Nut	240-5211-00
W4	1/4"-20 Wing Nut	240-5302-00
W5	1/4"-20 Toggle Wing	240-5324-00

* *Not Shown*

NOT ALL PARTS LISTED ABOVE ARE USED ON THIS GAME (QUANTITIES PER GAME WILL DIFFER). COMPARE ACTUAL PART ON GAME TO ABOVE DRAWINGS TO IDENTIFY THE PART NUMBER REQUIRED.

Playfield Top - Hex Spacers (Actual Size) †

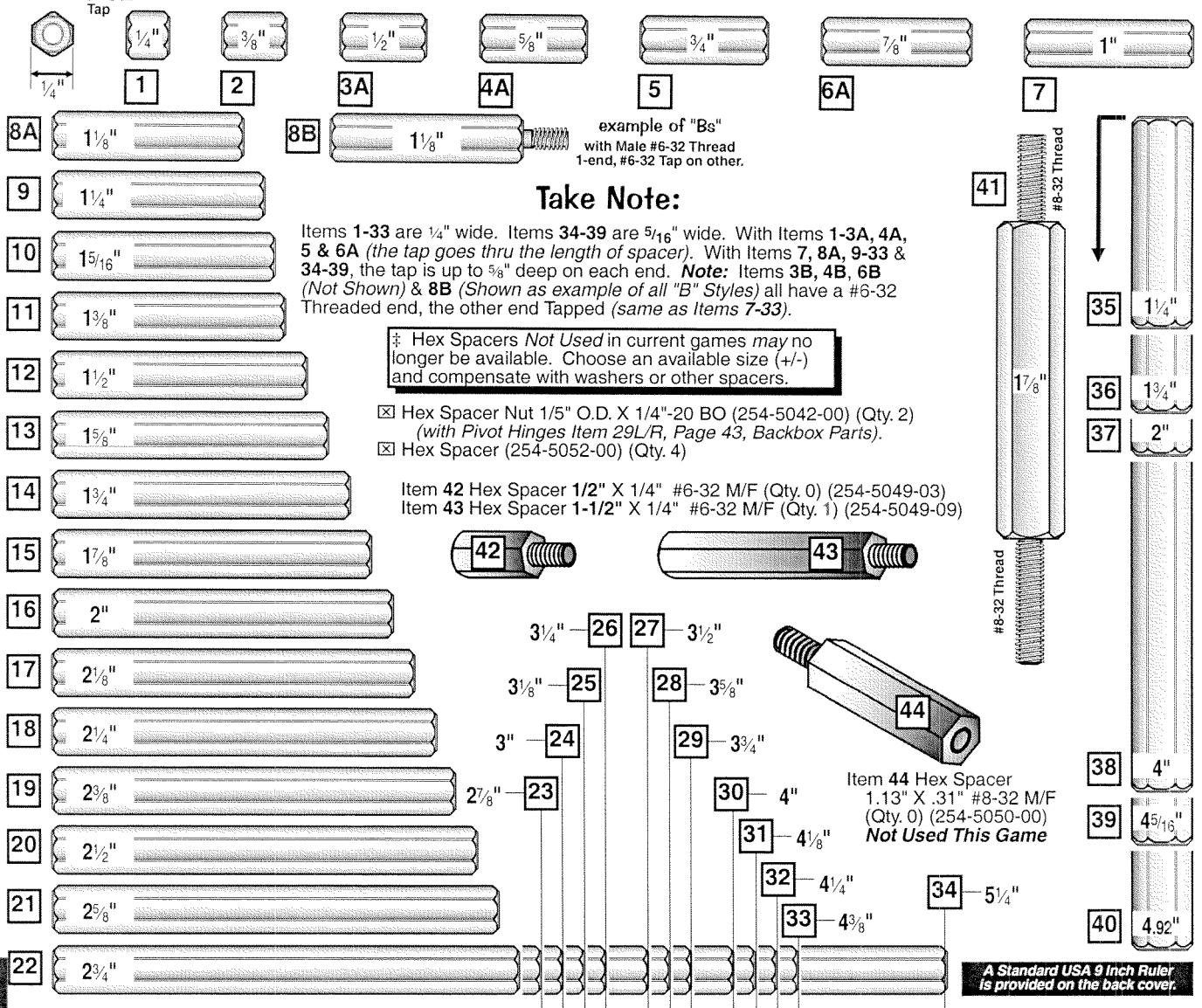

Take Note:

Items **1-33** are 1/4" wide. Items **34-39** are 5/16" wide. With Items **1-3A, 4A, 5 & 6A** *(the tap goes thru the length of spacer)*. With Items **7, 8A, 9-33** & **34-39**, the tap is up to 5/8" deep on each end. ***Note:*** Items **3B, 4B, 6B** *(Not Shown)* & **8B** *(Shown as example of all "B" Styles)* all have a #6-32 Threaded end, the other end Tapped *(same as Items 7-33)*.

‡ Hex Spacers *Not Used* in current games *may* no longer be available. Choose an available size (+/-) and compensate with washers or other spacers.

☒ Hex Spacer Nut 1/5" O.D. X 1/4"-20 BO (254-5042-00) (Qty. 2) *(with Pivot Hinges Item 29L/R, Page 43, Backbox Parts).*
☒ Hex Spacer (254-5052-00) (Qty. 4)

Item **42** Hex Spacer **1/2"** X 1/4" #6-32 M/F (Qty. 0) (254-5049-03)
Item **43** Hex Spacer **1-1/2"** X 1/4" #6-32 M/F (Qty. 1) (254-5049-09)

Item **44** Hex Spacer
1.13" X .31" #8-32 M/F
(Qty. 0) (254-5050-00)
Not Used This Game

A Standard USA 9 Inch Ruler is provided on the back cover.

Parts Identification

Nr.	HEX SPACERS	SPI PART Nr.	Nr.	HEX SPACERS	SPI PART Nr.
1	1/4" X 1/4" : #6-32 Tap *(both ends)*	254-5008-00	19	2 3/8" X 1/4" : #6-32 Tap *(both ends)*	254-5008-28
2	3/8" X 1/4" : #6-32 Tap *(both ends)*	254-5008-12	20	2 1/2" X 1/4" : #6-32 Tap *(both ends)*	254-5008-16
3A	1/2" X 1/4" : #6-32 Tap *(both ends)*	254-5008-03	21	2 5/8" X 1/4" : #6-32 Tap *(both ends)*	254-5008-08
3B*	Identical to **3A** *with #6-32 Thread end*	254-5024-03	22	2 3/4" X 1/4" : #6-32 Tap *(both ends)*	254-5008-15
4A	5/8" X 1/4" : #6-32 Tap *(both ends)*	254-5008-02	23	2 7/8" X 1/4" : #6-32 Tap *(both ends)*	254-5008-31
4B*	Identical to **4A** *with #6-32 Thread end*	254-5024-02	24	3" X 1/4" : #6-32 Tap *(both ends)*	254-5008-14
5	3/4" X 1/4" : #6-32 Tap *(both ends)*	254-5008-04	25	3 1/8" X 1/4" : #6-32 Tap *(both ends)*	254-5008-19
6A	7/8" X 1/4" : #6-32 Tap *(both ends)*	254-5008-05	26	3 1/4" X 1/4" : #6-32 Tap *(both ends)*	254-5008-26
6B*	Identical to **6A** *with #6-32 Thread end*	254-5024-05	27	3 1/2" X 1/4" : #6-32 Tap *(both ends)*	254-5008-27
7	1" X 1/4" : #6-32 Tap *(both ends)*	254-5008-06	28	3 5/8" X 1/4" : #6-32 Tap *(both ends)*	254-5008-25
8A	1 1/8" X 1/4" : #6-32 Tap *(both ends)*	254-5008-17	29	3 3/4" X 1/4" : #6-32 Tap *(both ends)*	254-5008-36
8B	Identical to **8A** *with #6-32 Thread end*	254-5024-17	30	4" X 1/4" : #6-32 Tap *(both ends)*	254-5008-21
9	1 1/4" X 1/4" : #6-32 Tap *(both ends)*	254-5008-11	31	4 1/8" X 1/4" : #6-32 Tap *(both ends)*	254-5008-23
10	1 5/16" X 1/4" : #6-32 Tap *(both ends)*	254-5008-34	32	4 1/4" X 1/4" : #6-32 Tap *(both ends)*	254-5008-30
11 ‡	1 3/8" X 1/4" : #6-32 Tap *(both ends)*	254-5008-33	33	4 3/8" X 1/4" : #6-32 Tap *(both ends)*	254-5008-29
12	1 1/2" X 1/4" : #6-32 Tap *(both ends)*	254-5008-09	34	5 1/4" X 1/4" : #6-32 Tap *(both ends)*	254-5008-35
13 ‡	1 5/8" X 1/4" : #6-32 Tap *(both ends)*	254-5008-13	35	1 1/4" X 5/16" : #6-32 Tap *(both ends)*	254-5018-09
14	1 3/4" X 1/4" : #6-32 Tap *(both ends)*	254-5008-10	36	1 3/4" X 5/16" : #6-32 Tap *(both ends)*	254-5018-06
15 ‡	1 7/8" X 1/4" : #6-32 Tap *(both ends)*	254-5008-20	37	2" X 5/16" : #6-32 Tap *(both ends)*	254-5018-07
16	2" X 1/4" : #6-32 Tap *(both ends)*	254-5008-07	38	4" X 5/16" : #6-32 Tap *(both ends)*	254-5018-03
17	2 1/8" X 1/4" : #6-32 Tap *(both ends)*	254-5008-32	39	4 5/16" X 5/16" : #6-32 Tap *(both ends)*	254-5018-00
18	2 1/4" X 1/4" : #6-32 Tap *(both ends)*	254-5008-18	40	4.92" X 5/16" : #6-32 Tap *(both ends)*	254-5018-04

NOT ALL PARTS LISTED ABOVE ARE USED ON THIS GAME (QUANTITIES PER GAME WILL DIFFER). COMPARE ACTUAL PART ON GAME TO ABOVE DRAWINGS TO IDENTIFY THE PART NUMBER REQUIRED.

Playfield Top - Plastic Posts & Spacers & Metal Spacers (Actual Size) †

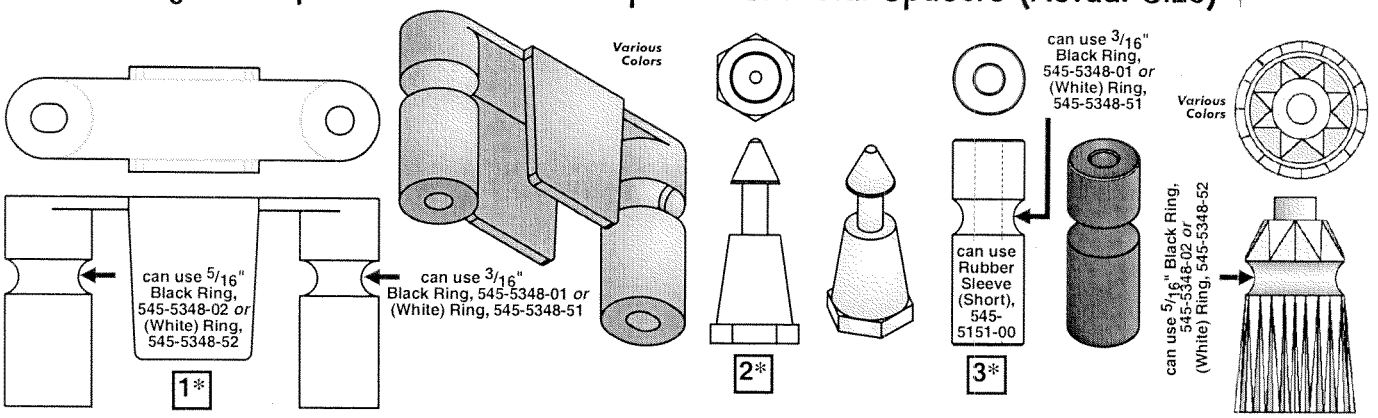

PLASTIC PART COLOR CHART

Nr.	Color	Nr.	Color	Nr.	Color
-00	Black	-06	Yellow	-12	Fluor. Blue
-01	Clear	-07	Orange	-13	Teal Green
-02	Red	-08	(White)	-14	(Gray)
-03	Amber	-09	Purple	-15	Luminescent
-04	Green	-10	Fluor. Org.	-16	Gold
-05	Blue	-11	Fluor. Green		

* Items **1 & 5** come in various colors. *The "**-XX**" (the last 2-Digits in the Part Number)*, should be replaced with the desired 2-Digit number from the above Color Chart *(may not be available in every color; other colors used in prior games may no longer be available.) Call for availability.*

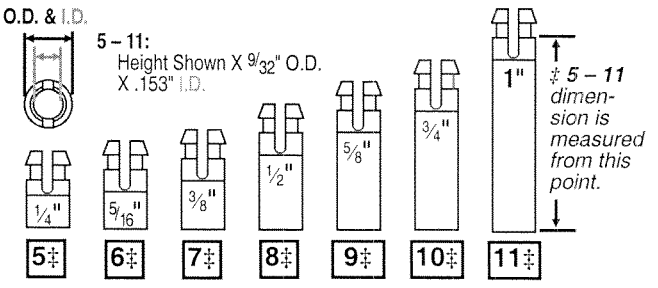

‡ *Items **5** through **11** dimensions are measured from bottom to just under the cut-away. Item **33** dimension is measured from top-to-top of curve. See pictorials with Items **11** & **33**.*

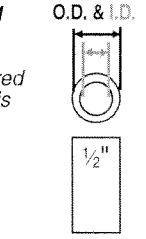

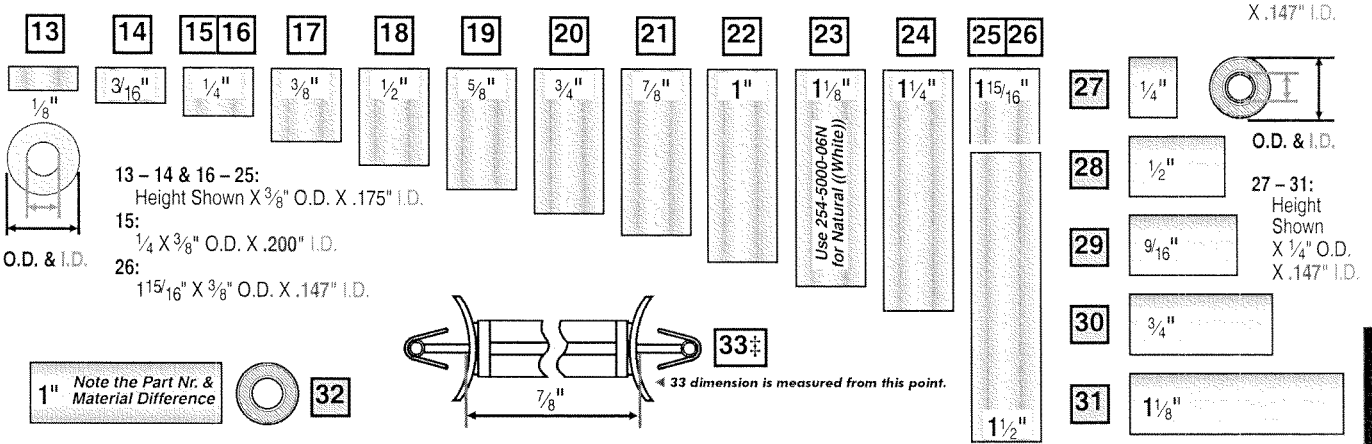

Nr.	PLASTIC POSTS & SPACERS	SPI PART Nr.
1**	Top Lane Plastic Mini-Lite Hood (XX-Color)	550-5061-XX
2**	Mini-Jewel Plastic Post (XX-Color)	550-5052-XX
3**	1 1/16" 1-Groove Plastic Post (XX-Color)	550-5059-XX
	*Item 3 Only : Use Part Number (550-5059-00) for color **Black**.*	
4**	1-Groove Jewel Plastic Post (XX-Color)	550-5034-XX
	Items 3 & 4 typically sec'd by: Post Fastening Scr. #6-32 Top / #6-32 Bot. (530-5012-02). *Use Color Chart above for last 2-digits. Not all colors are available.*	
	Items 1–4 Note: Use Color Chart above for last 2-digits. Not all colors are available.	
5 ‡	1/4" Self Retain. Plastic Spacer (White)	254-5007-02
6 ‡	9/16" Self Retain. Plastic Spacer (White)	254-5007-05
7 ‡	3/8" Self Retain. Plastic Spacer (White)	254-5007-01
8 ‡	1/2" Self Retain. Plastic Spacer (White)	254-5007-04
9 ‡	5/8" Self Retain. Plastic Spacer (White)	254-5007-00
10 ‡	3/4" Self Retain. Plastic Spacer (White)	254-5007-03
11 ‡	1" Self Retain. Plastic Spacer (White)	254-5007-06
12	1/2" X 1/4" O.D. X .147" I.D. Pls. Spacer (White)	254-5000-03
13	1/8" X 3/8" O.D. X .175" I.D. Pls. Spacer (Gray)	254-5000-19
14	3/16" X 3/8" O.D. X .175" I.D. Pls. Spcr. (Gray)	254-5000-18
15	1/4" X 3/8" O.D. X **.200"** I.D. Pls. Spcr. (Gray)	254-5000-02
16	1/4" X 3/8" O.D. X .175" I.D. Pls. Spacer (Gray)	254-5000-09
17	3/8" X 3/8" O.D. X .175" I.D. Pls. Spacer (Gray)	254-5000-12
18	1/2" X 3/8" O.D. X .175" I.D. Pls. Spacer (Gray)	254-5000-01
19	5/8" X 3/8" O.D. X .175" I.D. Pls. Spacer (Gray)	254-5000-14
20	3/4" X 3/8" O.D. X .175" I.D. Pls. Spacer (Gray)	254-5000-07

Nr.	PLASTIC POSTS & SPACERS	SPI PART Nr.
21	7/8" X 3/8" O.D. X .175" I.D. Pls. Spacer (Gray)	254-5000-11
22	1" X 3/8" O.D. X .175" I.D. Pls. Spacer (Gray)	254-5000-04
23	1 1/8" X 3/8" O.D. X .175" I.D. Pls. Spcr. (Gray)	254-5000-06
	*Item 23 Only : Add the letter " **N** " for color Natural (if available) or " **B** " for color Black.*	
24	1 1/4" X 3/8" O.D. X .175" I.D. Pls. Spcr. (Gray)	254-5000-05
25	1 1/2" X 3/8" O.D. X .175" I.D. Pls. Spcr. (Gray)	254-5000-08
26	1 15/16" X 3/8" O.D. X .147" I.D. Plastic Spacer (Gray)	254-5000-15
	Items 13-26 Only : Spacers may also be Black in color (random from vendor).	
	Not Shown and listed for reference only : 254-5000-10: 2 1/2" X 3/8" O.D. X .175" I.D. -13: 5/16" X 1/4" X .147"; -16: 5/16" X 5/16" X .190"; -17: 1 3/4" X 3/8" O.D. X .175" I.D.	
27	1/4" X 5/16" O.D. X .144" I.D. Metal Spacer	254-5014-03
28	1/2" X 5/16" O.D. X .144" I.D. Metal Spacer	254-5014-00
29	9/16" X 5/16" O.D. X .144" I.D. Metal Spacer	254-5014-04
30	3/4" X 5/16" O.D. X .144" I.D. Metal Spacer	254-5014-01
31	1 1/8" X 5/16" O.D. X .144" I.D. Metal Spacer	254-5014-02
32	1" X 5/16" O.D. X .144" I.D. Metal Spacer	254-5001-00
33‡	7/8" Plastic Spacer Support *(Dual-Locking)*	254-5039-14
34	Plastic Spacer, .5" Plastic Mounting	254-5054-00
35	Plastic Spacer, 1.13" Plastic Mounting	254-5054-01

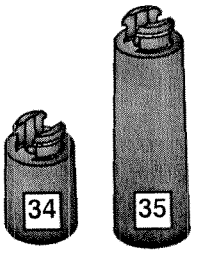

NOT ALL PARTS LISTED ABOVE ARE USED ON THIS GAME (QUANTITIES PER GAME WILL DIFFER). COMPARE ACTUAL PART ON GAME TO ABOVE DRAWINGS TO IDENTIFY THE P/N REQUIRED.

Parts Identification

Playfield - Rubber Parts Black ■, White □ & Blue ■ (Rings Actual Size) †

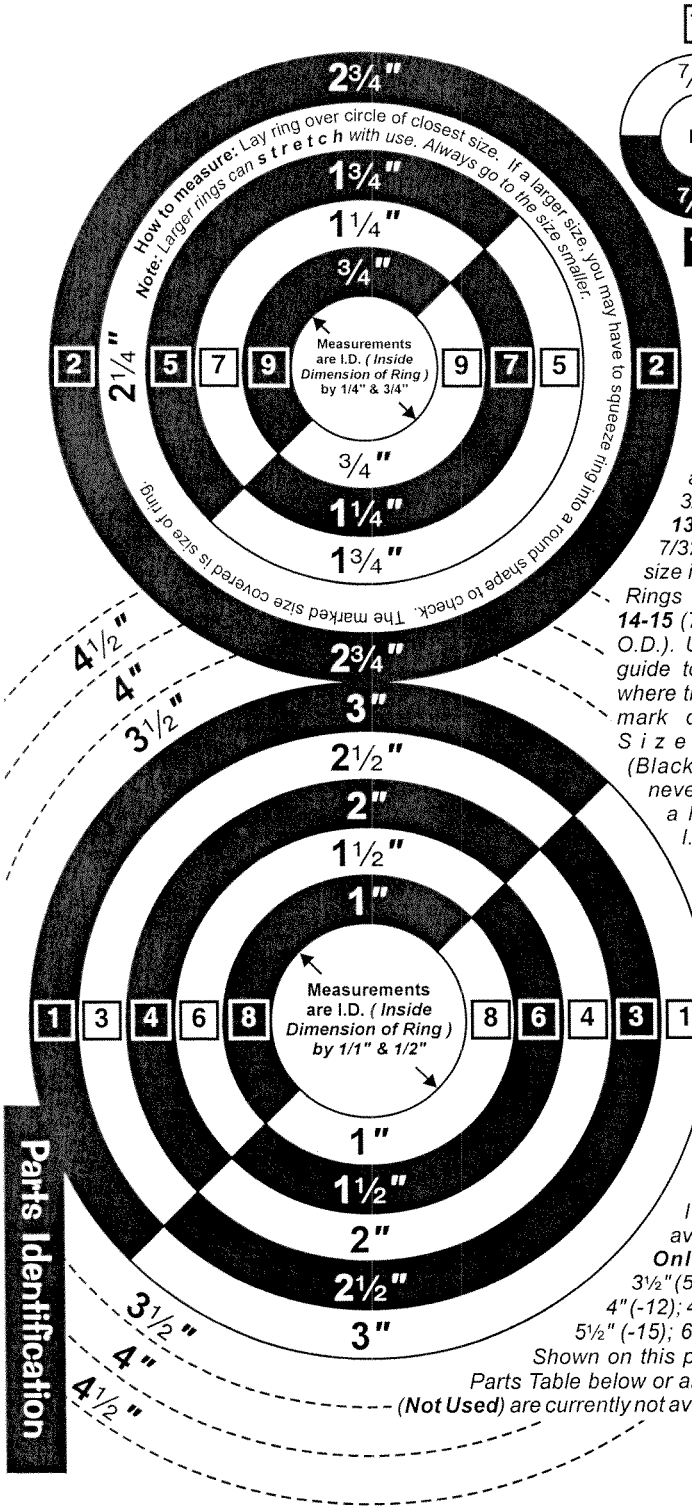

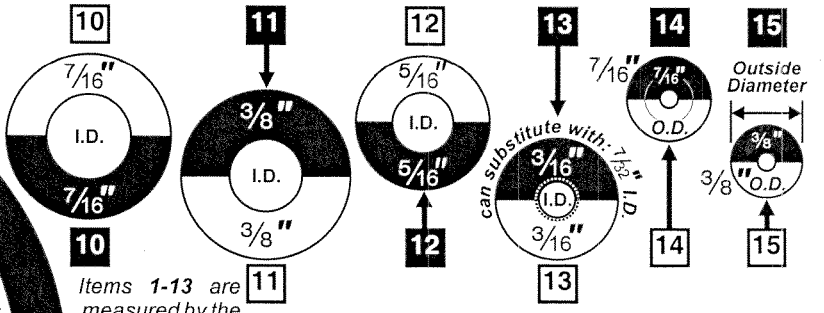

*Items **1-13** are measured by the Inside Diameter (I.D.). Items **1-9** and **11** are approximately 1/4" thick. Items **10**, **12-15** are approximately 3/16" thick. Item **13** can also be a 7/32" I.D Ring. The size is imprinted on all Rings except for Items **14-15** (7/16" O.D. & 3/8" O.D.). Use this page as a guide to measure rings where the size imprint or mark does not exist. Size 2¼" I.D. (Black or White) was never used. Choose a Ring Size +/- ¼" I.D. if required.*

***Note:** Sizes larger than 3" I.D. currently available in **Black Only (Not Used)**: 3½"(545-5348-11); 4"(-12); 4½"(-13); 5"(-14); 5½" (-15); 6" (-16). Sizes Not Shown on this page, listed in the Parts Table below or are noted with **N/U** (**Not Used**) are currently not available.*

Nr.	RUBBER RINGS	QTY.	SPI PART Nr.
1	3" I.D. Rubber Ring **BLACK**		545-5348-10
	3" I.D. Rubber Ring **WHITE**		545-5348-60
2	2¾" I.D. Rubber Ring **BLK**		545-5348-20
	2¾" I.D. Rubber Ring **WHT**	N/U	545-5348-70
3	2½" I.D. Rubber Ring **BLK**	2	545-5348-09
	2½" I.D. Rubber Ring **WHT**		545-5348-59
4	2" I.D. Rubber Ring **BLACK**		545-5348-08
	2" I.D. Rubber Ring **WHITE**		545-5348-58
5	1¾" I.D. Rubber Ring **BLK**	1	545-5348-21
	1¾" I.D. Rubber Ring **WHT**	N/U	545-5348-71
6	1½" I.D. Rubber Ring **BLK**	1	545-5348-07
	1½" I.D. Rubber Ring **WHT**		545-5348-57
7	1¼" I.D. Rubber Ring **BLK**		545-5348-06
	1¼" I.D. Rubber Ring **WHT**		545-5348-56
8	1" I.D. Rubber Ring **BLACK**	1	545-5348-05
	1" I.D. Rubber Ring **WHITE**		545-5348-55
9	¾" I.D. Rubber Ring **BLACK**	1	545-5348-04
	¾" I.D. Rubber Ring **WHITE**		545-5348-54
10	7/16" I.D. Rubber Ring **BLK**		545-5348-18
	7/16" I.D. Rubber Ring **WHT**		545-5348-68
11	3/8" I.D. Rubber Ring **BLACK**		545-5348-03
	3/8" I.D. Rubber Ring **WHITE**	N/U	545-5348-53
12	5/16" I.D. Rubber Ring **BLK**	4	545-5348-02
	5/16" I.D. Rubber Ring **WHT**		545-5348-52
13	3/16" I.D. Rubber Ring **BLK**	6	545-5348-01
	3/16" I.D. Rubber Ring **WHT**		545-5348-51
14	7/16" O.D. Rubber Ring **BLK**	58	545-5348-17
	7/16" O.D. Rubber Ring **WHT**		545-5348-67
	***Note:** Item **14**, 7/16" O.D. Black Rings (Qty. 44 of 49) are used to cusion the Bayonet Sockets under the playfield (between bracket & playfield).*		
15	3/8" O.D. Rubber Ring **BLK**		545-5348-19
	3/8" O.D. Rubber Ring **WHT**		545-5348-69
16	Small Flipper **BLACK** Ring *(Soft Duro)*	1	545-5207-00
	Small Flipper **RED** Ring *(Soft Duro)*		545-5207-22
17	Large Flipper **BLACK** Ring *(50 Duro)*	2	545-5277-00
	Large Flipper **YELLOW** Ring *(50 Duro) (use -06 40 Duro)*		545-5277-04
	Large Flipper **WHITE** Ring *(50 Duro)*		545-5277-08
	Large Flipper **RED** Ring *(Soft Duro)*		545-5277-22

Take Note:

For Blue Rubber Pads, see the next page and/or the Blue Pages for the assembly the pads are found on for the part number.

Nr.	RUBBER BUMPER PADS	QTY.	SPI PART Nr.
A*	Bumper **BLK** Pad (Lg. w/ grommet)		545-5428-00
	*Item **A** are located on Flipper Assemblies. See next page for location.*		
B*	Bumper **BLK** Pad (Sm. w/ grommet)	6	545-5105-00
	*Item **B** are located on multiple assemblies. See next page for location.*		

Nr.	RBR. BUMPER POST SLVS.	QTY.	SPI PART Nr.
D*	Bumper **BLACK** Post Sleeve (Tall)		545-5308-00
	Item D in RED use 545-5308-22; Item D in WHITE use 545-5308-08.		
E*	Bumper Post Sleeve (Short)		545-5151-00

Parts Identification

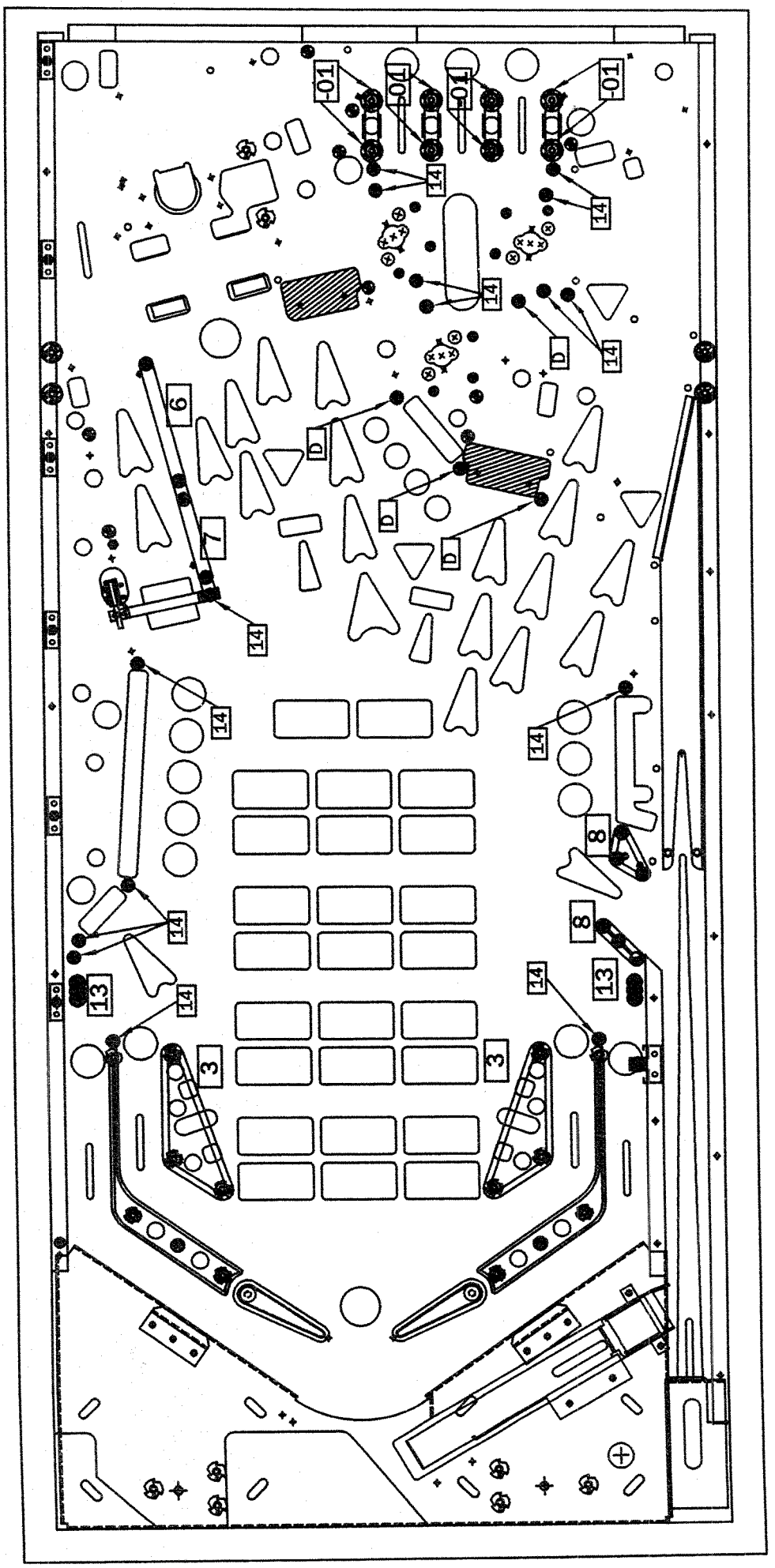
-01
-01
-01
-01
14
14
14
14
D
D
D
D
6
7
8
8
13
13
3
3

Playfield Top & Bottom - Small Bayonet Sockets & Bulbs ■ (Actual Size) †

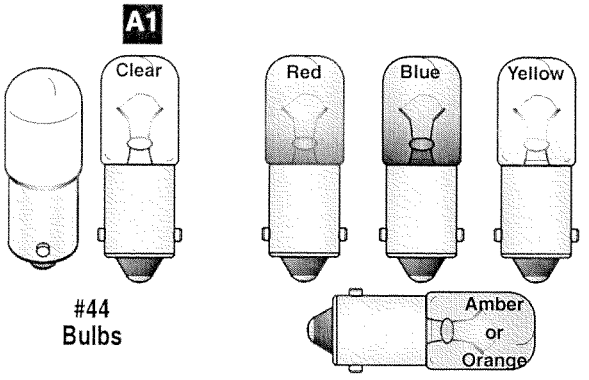

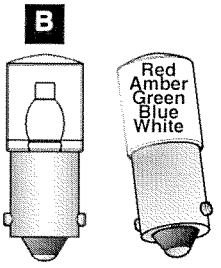

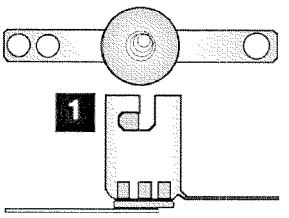

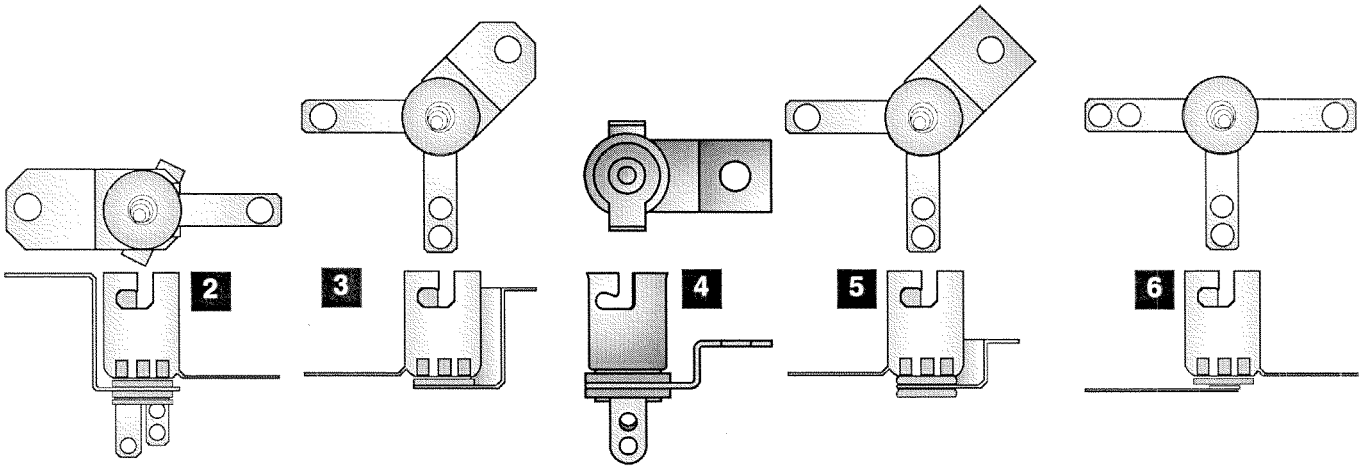

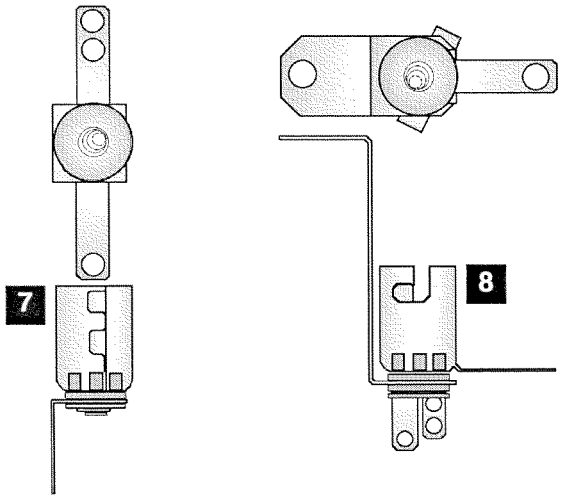

Parts Identification

Nr.	BULBS (#44)	SPI PART Nr.
A	#44 Bulb (Clear) *Heavy Filament*	165-5000-44-HF
	#44 Bulb *(replace -XX w/color below)*	165-5053-XX-HF

Item A Note: **Amber** (165-5053-03-HF); **Green** (165-5053-04-HF); **Yellow** (165-5053-06-HF); **Red** (165-5053-02-HF); **Blue** (165-5053-05-HF); **Orange** (165-5053-07-HF)

Nr.	BULBS (LED & #455)	SPI PART Nr.
B	LED Module (WHT) (12.8v 20-25mA) Bynt.	112-5023-08

Item B Note: *Different Colors may be available ~*
Red (112-5023-02); **Amber** (112-5023-03); **Green** (112-5023-04); **Blue** (112-5023-05);

Nr.	SMALL BAYONET SOCKETS	SPI PART Nr.
1	2-Lug Staple Down Socket	077-5000-00
2	3-Lug Stand-Up Socket (Med. Brkt.)	077-5008-00
3	2-Lug Stand-Up Socket (Med. Brkt.)	077-5002-00
4	2-Lug Stand-Up Socket (Short Brkt.)	077-5223-00
5	2-Lug Stand-Up Sckt. (Short Bracket)	077-5002-31
6	3-Lug Staple Down Socket	077-5001-00
7	2-Lug Laydown Socket	077-5003-00
8	3-Lug Stand-Up Socket (Tall Bracket)	077-5009-00

Nr.	SMALL BAYONET SOCKETS	SPI PART Nr.
9	3-Lug Laydown Socket (3 Lugs Flat)	077-5006-00
10	2-Lug Stand-Up Socket (Tall Bracket)	077-5005-00
11	3-Lug Stand-Up Long Shell Socket	077-5013-00
12	2-Lug Stand-Up Lg. Shell Socket (GIs)	077-5031-00
13	1-Lug S-U Lg. Shell Sckt. (Med. Brkt.)	077-5012-00
14	3-Lug S-U Lg. Shell Sckt. (45° Brkt.)	077-5035-00
15	3-Lug Laydown Socket (2 Lugs Bent)	077-5032-00

NOT ALL PARTS LISTED ABOVE ARE USED ON THIS GAME (QUANTITIES PER GAME WILL DIFFER). COMPARE ACTUAL PART ON GAME TO ABOVE DRAWINGS TO IDENTIFY THE PART NUMBER REQUIRED.

Playfield Top & Bot. - Small Bayonet Sockets & Bulbs ■ (Actual Size) † Continued

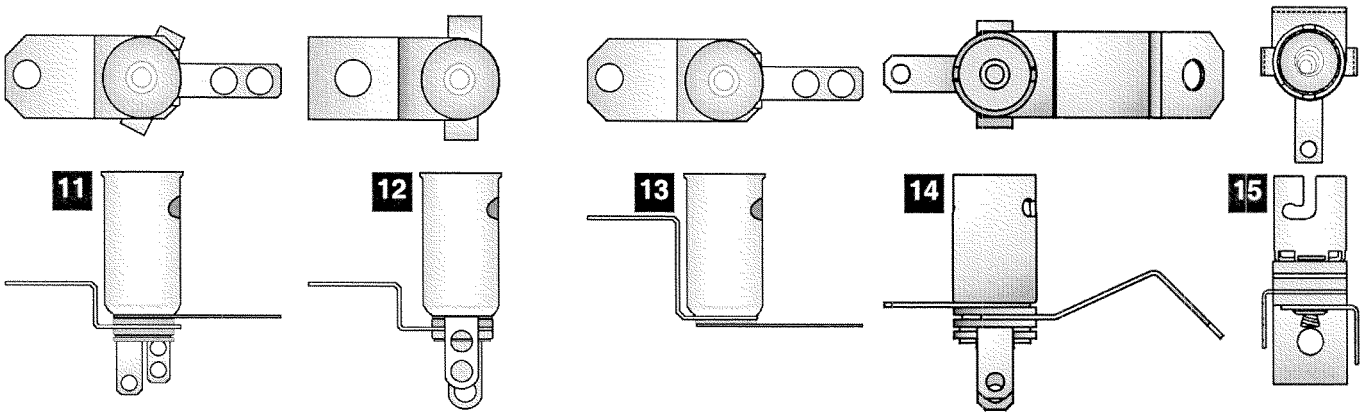

Playfield Bottom - Large Bayonet Sockets & Bulbs ■ (Actual Size) †

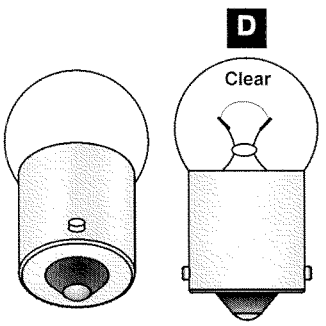

#89
Bulb

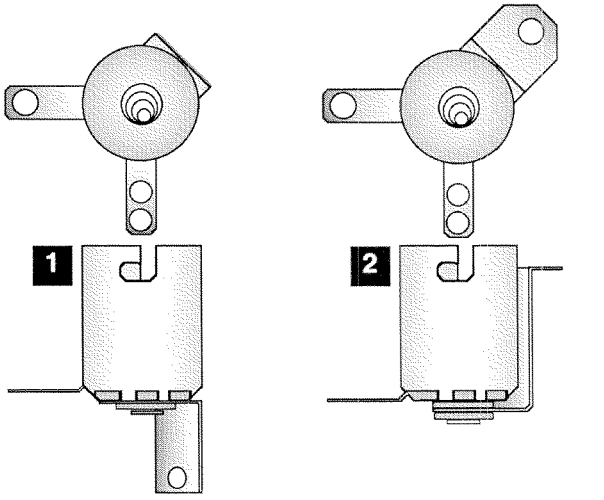

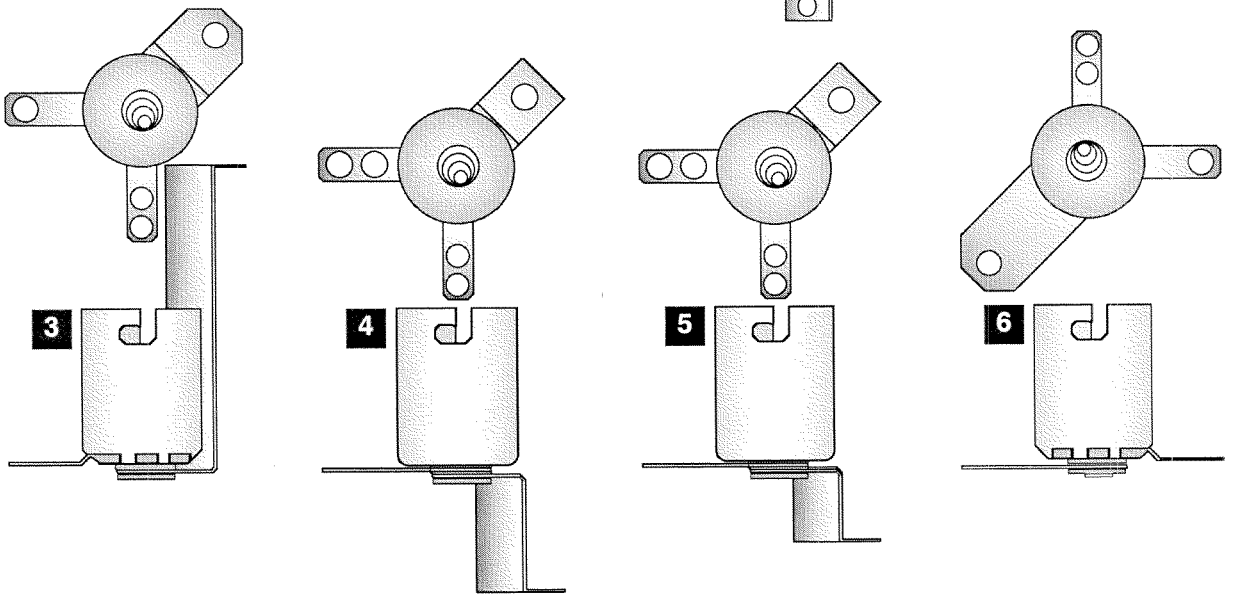

Nr.	BULBS (#89)	SPI PART Nr.
D	#89 Bulb *Heavy Filament*	165-5000-89-HF

Nr.	LARGE BAYONET SOCKETS	SPI PART Nr.
1	2-Lug Laydown Standard Socket	077-5100-00
2	2-Lug Stand-Up Short Socket	077-5101-00
3	2-Lug Stand-Up Long Socket	077-5102-00
4	2-Lug Stand-Up Rev. Mount Socket	077-5103-00
5	2-Lug Stand-Up Rv. Mnt. Short Socket	077-5106-00
6	2-Lug Straight Leg Socket	077-5107-00

NOT ALL PARTS LISTED ABOVE ARE USED ON THIS GAME (QUANTITIES PER GAME WILL DIFFER). COMPARE ACTUAL PART ON GAME TO ABOVE DRAWINGS TO IDENTIFY THE PART NUMBER REQUIRED.

Playfield Top & Bottom - Wedge Base Sockets & Bulbs ■ (Actual Size) †

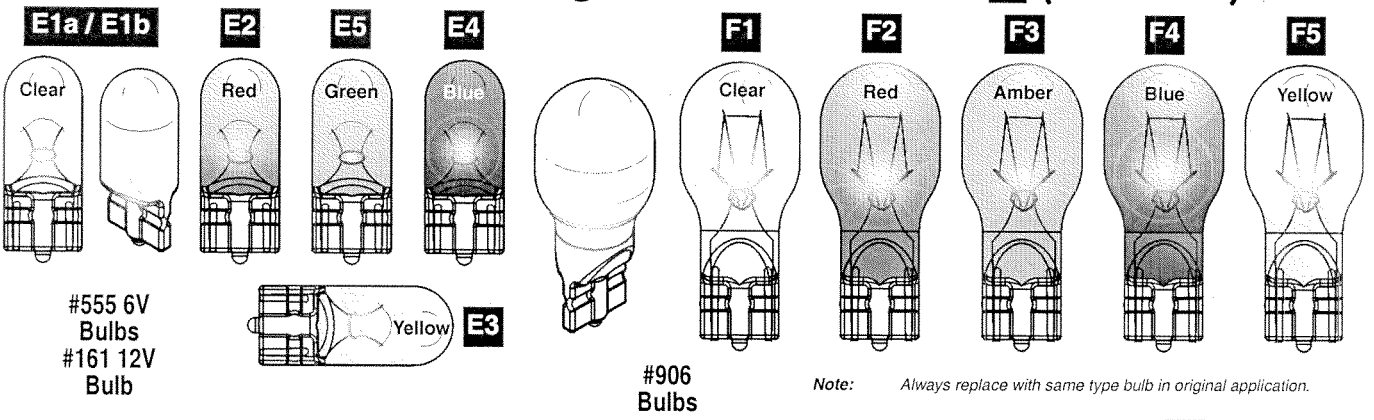

Note: *Always replace with same type bulb in original application.*

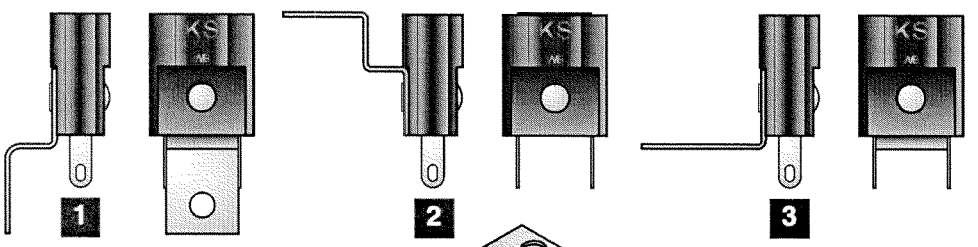

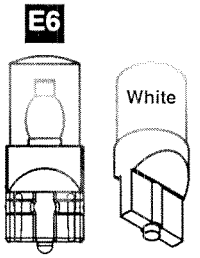

LED Bulb (Wedge Base)

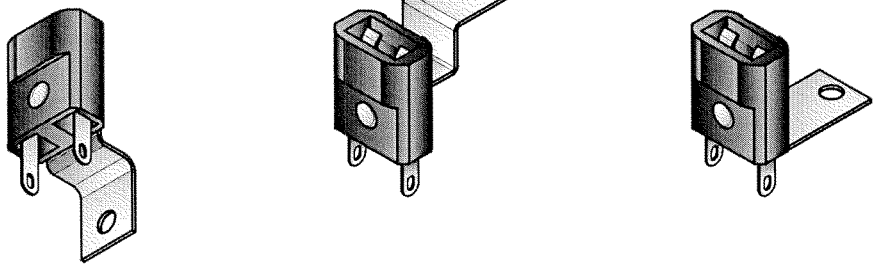

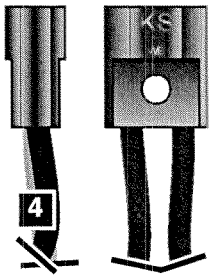

Item 4 Socket does not require brackets. Old stock may include "L" style brackets (each side); do not secure to assembly. ***Black Wires (Qty. 2) are 12" each.***

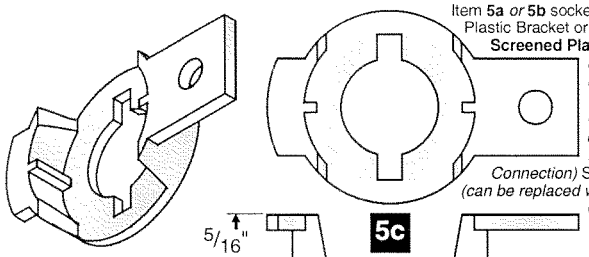

Item **5a** *or* **5b** sockets are secured to the playfield or assembly by Item **5c** Plastic Bracket or *may* also be snapped into specially cut **Clear and / or Screened Plastic Pieces** *or* **Metal Brackets** *(used for multiple mounting of sockets when positioned closely together or in tight areas). If Plastic Pieces or Metal Brackets are used to mount Item* ***5a*** *or* ***5b*** *Sockets, it will be noted on* ***Playfield Bottom - Miscellaneous Parts and Brackets****, page earlier in this Chapter.*

Item **5a** is a solderless **IDC** *(Insulation Displacement Connection)* Socket with a built-in Diode, 1N4003 (112-5003-00) *(can be replaced with 1N4001 Diode, 112-5001-00).* Item **5b** Socket (Yellow) is identical to **5a** (Socket) *except* it does ***NOT REQUIRE*** a diode *(Flash Lamp usage).*

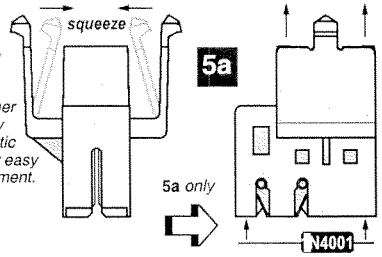

Just squeeze the "side arms" of the socket together and pull away from the plastic or bracket for easy Bulb replacement.

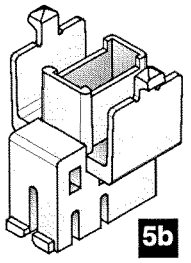

5b *is Yellow with* ***No Diode***

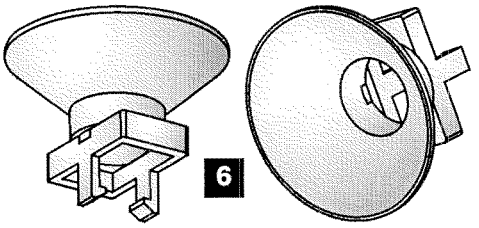

Nr.	BULBS (#555)	SPI PART Nr.
E1a	#555 Wedge Base Bulb (Clear)	165-5002-00
E2-E5	#555 Wedge Base Bulb (Multi-Color)	165-5054-XX
	Item E2-E5 Bulb Note: *Different Colors available (not used in this game) ~* Red (165-5054-02); Green (165-5054-04); Blue (165-5054-05); Yellow (165-5054-06);	
E1b	#161 12V Wedge Base Bulb (Clear)	165-5032-00

Nr.	BULBS (LED & #906)	SPI PART Nr.
E6	LED Module (WHT) **(5v - 6.3v) Wedge Base**	112-5024-08
	Item E6 Bulb Note : *Typically used with Item 4 Socket in Pop Bumpers.*	
F	#906 Wedge Base Bulb (Clear)	165-5004-00
	Item F Note: *Different Colors available (not used in this game) ~* Red (165-5004-02); Amber (165-5004-03); Blue (165-5004-05); Yellow (165-5004-06)	

Nr.	WEDGE BASE SOCKETS	SPI PART Nr.
1	Wedge Base Socket (Laydown)	077-5026-01
2	Wedge Base Socket (Offset)	077-5029-00
3	Wedge Base Socket (Laydown GI)	077-5030-00
4	W.B. Socket (Bumpers/Special App.)	077-5206-00

Nr.	WEDGE BASE SOCKETS	SPI PART Nr.
5a	IDC Snap-On Socket (Biege)	077-5216-00
5b	IDC Snap-On Socket ***No Diode*** (Yel.)	077-5216-**01**
5c	$^{5}/_{16}$" Ht. Bracket (White)	545-5760-18
6	Light Reflector (Silver Plst.) REF540N	545-5409-01
	Note Item 6 : *Typically used with Item 1 (but will fit on any similiar Wedge Base Socket).*	

NOT ALL PARTS LISTED ABOVE ARE USED ON THIS GAME (QUANTITIES PER GAME WILL DIFFER). COMPARE ACTUAL PART ON GAME TO ABOVE DRAWINGS TO IDENTIFY THE PART NUMBER REQUIRED.

Optional Kits available through your Distributor:

Flipper Rebuild Kit (Left) 500-6307-10

Flipper Base Plate Kit (Left) 515-6617-01

Kit includes: *Flipper Base Plate (Left) pre-threaded with securing hardware; see the Flipper Drawing for view.*

Flipper Rebuild Kit (Right) 500-6307-00

Flipper Base Plate Kit (Right) 515-6617-00

Kit includes: *Flipper Base Plate (Left) pre-threaded with securing hardware; see the Flipper Drawing for view.*

Pinball Location Maintenance Standard Kit (for 24 Pinball) 502-6002-A7

Standard Kit includes : *8 oz. Novus Wax #2 Fine (Red) (**675-0003-01**), Cloth, Rubber Rings (used above playfield), Bulbs (Bulb quantities vary and is limited to 25 per type), Fuses (1/per type) and 4 Pinballs.* ***Note:*** *Quanties, sizes and contents subject to change without notice.*

Pinball Location Maintenance Deluxe Kit (for 24 Pinball) 502-6003-A7

Deluxe Kit includes : *Pinball Location Maintenance Standard Kit as described above plus a quantity of Flipper Rebuild Kits.* ***Note:*** *Quantity varies which equals the same quantity of flippers used in this game.*

▲ THIS GAME KIT INCLUDES (3) FLIPPER REBUILD KITS ▲

Plastics*Kit (for 24 Pinball) 803-5000-A7

Plastics Kit includes: *Plastic Sets (830-6079-XX)*

Decals*Kit (for 24 Pinball) 802-5000-A7

Decals Kit includes: *Decal Set (820-6417-XX)*

Mylar*Kit (for 24 Pinball) 802-5001-A7

Mylar Kit includes: *Ball Drop (820-5815-00); Pop Protector (820-6418-00)*

****Attention:*** *No individual Plastic or Decal can be ordered separately, unless noted otherwise. Plastics & Decals are subject to change without notice during and / or after production. Key Fobs subject to availability and may or may not be included in the plastic set. All designs, shapes & pieces used subject to change without notice. Kit contents subject to change. Service Bulletin(s) will announce any critical changes, if warranted. The last 2-digits shown on plastics or decals are for reference only.*

Ball Shooter (Plunger) Assembly, 500-6146-00-04 (Items 1-6)

Securing Hardware for Items 3 & 5 are also shown separated from the Ball Shooter (Plunger) Assembly for clarity.

Nr.	BALL SHOOTER PARTS	QTY.	SPI PART Nr.
1	Housing Asm. + Bushings *(Item 4)*	1	535-5067-02
	Item 1 is secured to the Cabinet by: Support Plate [not included with Item 1 *or* Assembly] (**535-5027-00**), #10-32 X 1/2" PPH (Sems) Zinc TF (Qty. 3) (237-6033-00), #10 Split Lock Washer (Qty. 3) (244-5003-00) **and** #6 X 1/2" HWH AB (Zinc) Red (Qty. 2) (234-5001-02)		
2	Rod Assembly *(with **Black Knob**)*	1	515-6557-00
3	Comp. Spring (Short) *(Knob Side)*	1	266-5010-00
	Item 3 is sandwiched onto Item 2 (Front Side) between the knob and by: Washer, 3/8" I.D. X 5/8" O.D. X 1/16" (242-5014-00)		
4	Bushing, 3/8" I.D. (Oilite)	2	280-5010-00
	Item 4 is included with** Item 1, Housing, (1 @ the front; 1 @ the back) **as shown.		
5	Comp. Spring (Long) [GREEN, .035" ø]	1	266-5001-04
	Item 5 is sandwiched onto Item 2 (Rubber Tip Side) by: Washer, 3/8" I.D. X 5/8" O.D. X 1/16" (Qty. 1/per side) (242-5014-00) **and** Retaining Ring, 3/8" ø Shaft (270-5012-00)		
6	Rubber [Plunger] Tip (Black 50 Duro)	1	545-5276-00

***Ordering Note:** If **500-6146-00-04** is unavailable,* order the individual part(s) actually required. ... Identical to **500-6146-00-07** has Comp. Spring [**Orange, .038" ø**] (266-5001-**07**) *or* **500-6146-00-05** has Comp. Spring [**Blue, .031" ø**] (266-5001-**05**).

Autoplunger Arm Weld Asm., 500-6091-00 (Items 1-5), Autoplunger Coil Assembly, 500-6092-02-ND (Items 6-9) and Shooter Lane Switch Assembly, 500-6096-00 (Items 10-12)

Nr.	AUTOPL. ARM WELD PARTS	QTY.	SPI PART Nr.
1	Arm Weld Assembly	1	515-6526-00
	Item 1 is secured to Item 2 by: Retaining Ring, 1/4" ø Shaft (Qty. 1) (270-5002-00)		
2	Autoplunger Fulcrum	1	535-7697-00
3	Nyliner, 1/4" (Thomson #4l1-FF)	2	545-5423-00
4	Plunger & Link Assembly	0	511-5183-00
	Item 4 **is secured to Item 1 by:** Retaining Ring, 1/4" ø Shaft (Qty. 1) (270-5002-00) *For Individual Items use :* Plunger 1.81" Lg. (**530-5025-05**), Plunger Link (**545-5293-00**) and Roll Pin 1/8" ø x 5/8" Lg. (**251-5008-00**)		
5	Compression (Return) Spring	1	266-5020-00
	(ASM. REF. 500-6091-00, Items 1-5)		

Nr.	AUTOPLNGR. COIL PARTS	QTY.	SPI PART Nr.
6	Autoplunger Coil Bracket Assembly	1	515-6527-00
	Items 1 & 6 are secured below the P/F by: #8 X 1/2" SHWH AB (Zc.) (Qty. 9) (234-5101-00)		
7	Coil Retainer Bracket	1	535-5203-03
	Item 7 is secured to Item 6 by: #8-32 X 1/4" PPH MS (Sems) Zinc (Qty. 2) (232-5300-00)		
8	Coil, 24-940 [NO DIODE]	1	090-5036-ND
	COIL DOES NOT REQUIRE A DIODE. SEE ⟲ COIL NOTE BELOW FOR DETAILS.		
9	Coil Sleeve	1	545-5031-00
	(ASM. REF. 500-6092-02-ND, Items 6-9)		

Nr.	SWITCH PARTS	QTY.	SPI PART Nr.
10	Switch *(for Shooter Lane)*	1	180-5157-00
	Switch has a Diode (1N4004) (112-5003-00). *Can be replaced with (1N4001) (112-5001-00).*		
11	Switch Mounting Bracket	1	535-6173-00
	Item 11 is secured to Playfield by: #6 X 1/2" SLT HWH AB (Zinc) (Qty. 2) (234-5001-02)		
12	Switch Body Protect Plate	14	535-6539-00
	Item 12 is secured to Items 10-11 by: #2-56 X 1/2" Unslotted Ser. HWH #4 Head TR3 Black (Qty. 2) (237-5937-02) **and** #2-56 Hex Nut (Qty. 2) (240-5301-0) (ASM. REF. 500-6096-00, Items 10-12)		

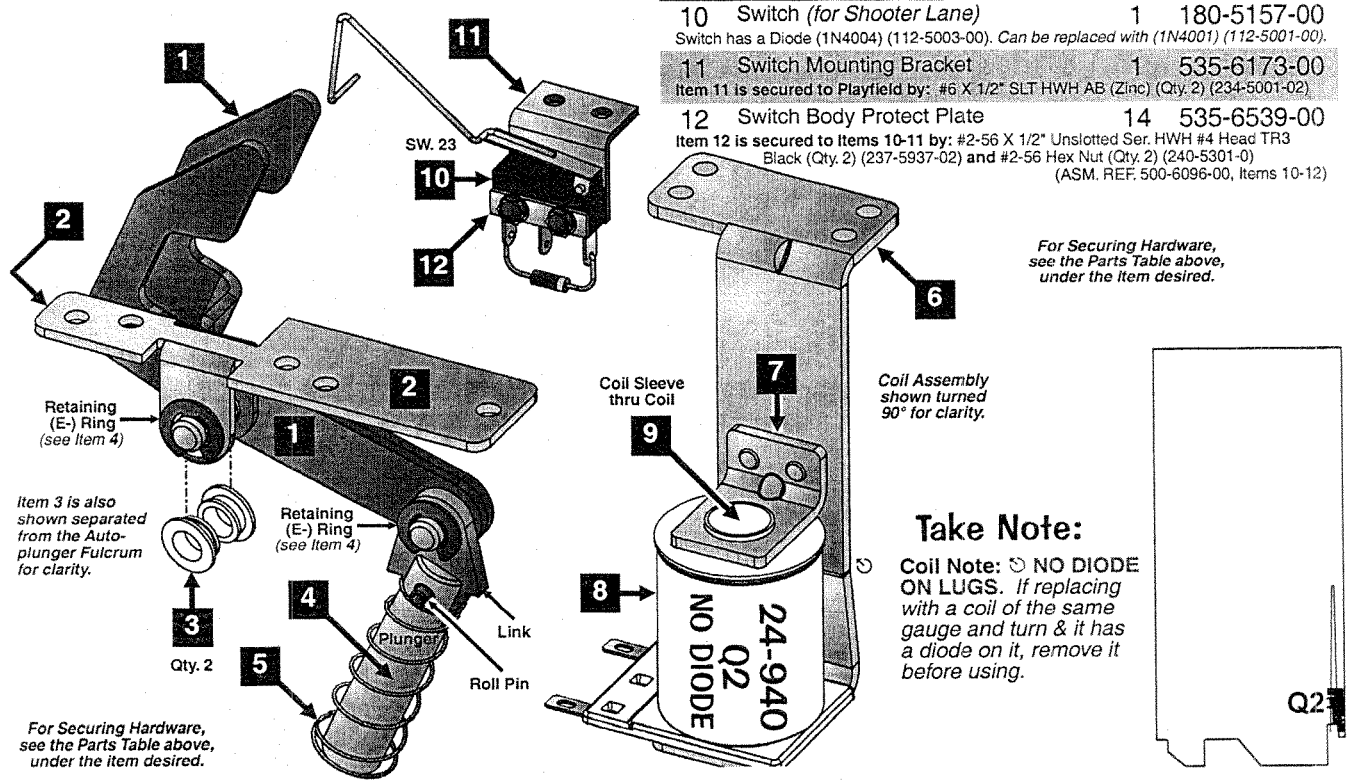

Take Note:

Coil Note: ⟲ **NO DIODE ON LUGS.** *If replacing with a coil of the same gauge and turn & it has a diode on it, remove it before using.*

Assemblies & Ramps

4-Ball Trough Assembly, 500-6318-24-ND (Items 1-13)
and Associated Parts: See Parts Table Below.

Ordering Note: Identical to 500-6318-14 with exceptions, see note below Item 13 (Parts Table).

Nr.	4-BALL TROUGH PARTS	QTY.	SPI PART Nr.
1	Ball Trough Outhole Mounting Bracket	1	515-6580-01
	Item 1 is secured below the playfield by: #8 X 1/2" SHWH AB (Zc.) (Qty. 4) (234-5101-00)		
2	Coil Mounting Bracket	1	535-7330-01
	Item 2 is secured to Item 1 by: #8-32 X 3/8" HWH Swage (Sr.) Zinc (Qty. 4) (237-5975-00)		
3	Coil Retaining Bracket	1	535-5203-03
	Item 3 is secured to Item 2 by: #8-32 X 1/4" SHWH (Serr) Zinc (Qty. 2) (237-5975-04)		
4	Coil, 26-1200 [NO DIODE]	1	090-5044-ND
	COIL DOES NOT REQUIRE A DIODE. SEE ↻ COIL NOTE BELOW FOR DETAILS.		
5	Coil Sleeve (Short) (Formost #10-7077)	1	545-5076-01
6	Steel & Nylon Plunger Asm. (3.57")	1	515-7309-01
7	Compression (Return) Spring	1	266-5020-00
8	Rubber Bumper (Grommet)	1	545-5105-00
9	Micro Switch **(Roller Actuator, Lite-Force)**	3	180-5119-02
	Item 9 requires: Heat Shrink Tubing 1/8" o PUI-24 (Qty. 1"/per) (605-5006-00)		
	Switch has a Diode (1N4004) (112-5003-00). *Can be replaced with (1N4001) (112-5001-00).*		
10	Switch Body Protect Plate	3	535-6539-00

Nr.	4-BALL TROUGH PARTS	QTY.	SPI PART Nr.
11	Trough Ball Guide Plate	1	535-7801-00
	Item 11 is secured to Item 1 by: 1/4" X 5/16" X .144" I.D. Spacer Tap. (Qty. 1) (254-5014-03) and #2-56 X 1/2" HWH (Ser) UNS #4HD TR3 BO (Qty. 4) (237-5937-02)		
12	Dual OPTO TRANS Board Assembly	1	515-0173-00
13	Dual OPTO REC Board Assembly	1	515-0174-00
	Items 12 & 13 are secured by: #6-32 X 5/8" HWH Swg (Ser) Zc (Qty. 3/per) (237-5976-04) *For Individual Items use :* Dual OPTO Transmitter Board (Qty. 1) **(520-5173-00)**, Dual OPTO Receiver Board (Qty. 1) **(520-5174-00)**, OPTO PCB Tube Spacer (Brass) (Qty. 3/per) **(530-5308-02)** and OPTO PCB Rubber Grommet (Qty. 3/per) **(545-5518-00)**		

Ordering Note: *If **500-6318-24-ND** is unavailable, order the individual part(s) actually required. This assembly is identical to **500-6318-14-ND**, **-15** or **-25** except for the quantity of **Items 9 & 10** (Qty. 4/per on 5-Ball Trough) **and Item 11**, required when a Magnet Mech. is used in the game. **-ND** means **no diode** on **Item 4**, Coil, 26-1200.*

ASSOCIATED PARTS ARE NOT INCLUDED WITH THE ABOVE ASSEMBLY.

Nr.	ASSOCIATED PART(S)	QTY.	SPI PART Nr.
AP-A	Ball Trough Enter / Exit Scoop	1	535-7329-01
	Item AP-A secured to the playfield by: #8 X 1/2" SHWH AB (Zinc) (Qty. 4) (234-5101-00).		
AP-B	Steel Balls (1-1/16" ø)	4	260-5000-00

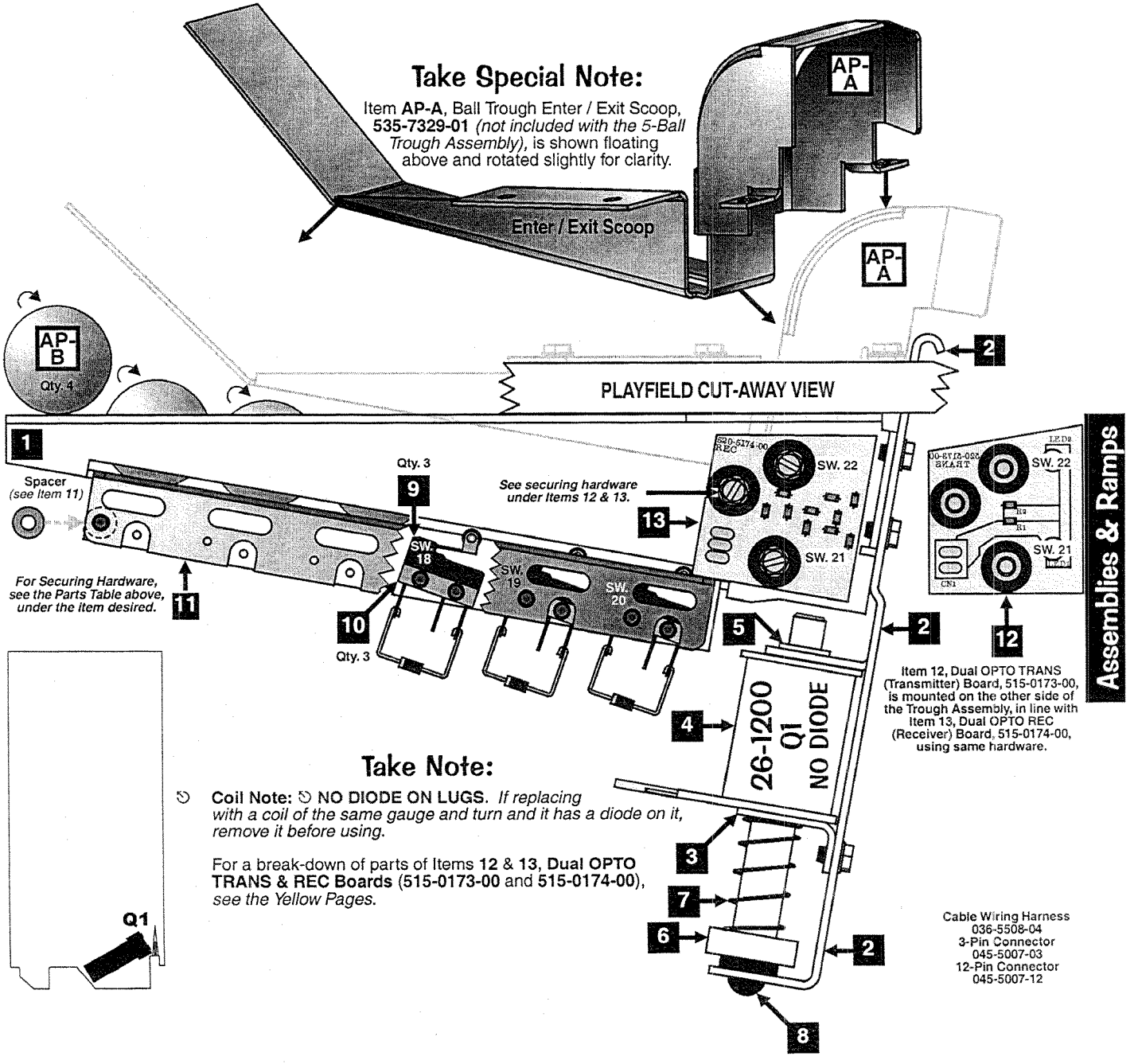

Flipper (Left) Assembly, 500-6543-15-ND (Items 1-15)
and Associated Parts: Yellow Flipper Bat & Shaft Asm., 515-5133-06-06 (Items AP-A / AP-B)

Nr.	FLIPPER (LEFT) PARTS	QTY.	SPI PART Nr.
1	Flipper Base Plate (**LEFT**)	1	*See **FRP1***
	Item 1 is secured below by: #8 X 1/2" SHWH AB (Zinc) (Qty. 8) (234-5101-00)		
	*Ordering Note : Individual Part (535-7275-01) is not prethreaded, see Item **FRP1**.*		
2	Flipper Bat Bushing (White Plastic) .25" ø I.D.	1	545-5070-00
	Item 2 is secured to Item 1 by: #6-32 X 3/8" HWH Swage (Ser.) Zc. (Qty. 3) (237-5976-02)		
3	Power (EOS / End-of-Stroke) Switch	1	180-5149-00
	Item 3 is secured to Item 1 by: #6-32 X 5/8" HWH Swage (Ser.) Zc. (Qty. 2) (237-5976-04)		
4	Sw. Plate/Spring Return Brkt. (**LEFT**)	1	535-7354-**01**
5	Flipper Return Spring	1	265-5035-00
6	Coil Stop Bracket Sub-Assembly	1	515-6308-01
	Item 6 is secured to Item 1 by: #10-32 X 3/8" SHWH Swage (Serr) Zinc (Qty 2) (237-5985-00) and #10 Split Lock Washer (Qty. 2) (244-5003-00)		
7	Spring Washer (17/32" ID X 3/4" X 1")	1	269-5002-00
8	Coil Support Bracket	1	535-7356-00
	Item 8 is secured to Item 1 by: #8-32 X 3/8" HWH Swage (Ser.) Zc. (Qty. 2) (237-5975-00)		
9	Coil, 23-900 [NO DIODE] BLUE	1	090-5020-30
	COIL DOES NOT REQUIRE A DIODE. SEE ↻ COIL NOTE BELOW FOR DETAILS.		
10	Coil Sleeve	1	545-5388-00
11	Deflector Pad (Bumper)	1	545-5428-00
12	Flipper Plunger & Link Sub-Assy.	1	515-6304-03
	For Individual Items use : Flipper Plunger (**530-5349-01**) and Plunger "Flipper" Link (**545-5611-01**) and is secured to the Plunger by: Bushing, .16" ø ID X .281" ø OD X .187" (Qty. 1) (530-5532-00) and Spiral Pin ø 5/32" X 3/4" Lg. (Qty. 1) (251-5015-02)		
13	Crank Bar (Pawl)	1	530-5070-02
	Item 13 requires: Bushing, .192" ø ID X .312" ø OD X .195" (Qty. 1) (530-5139-00)		
14®	Switch Actuator (**LEFT**) Sub-Assy.	1	515-7257-**01**
	For Individual Items use : Actuator & Spring Bracket (**LEFT**) (**535-9038-01**) and ® Switch Actuator (White Plastic) (**545-5612-00**) and is secured to the Bracket by: Rivet, 1/8" ø X 1/4" Lg. (Qty. 1) (249-5003-00)		
15	Set Screw: #10-32 X 3/4" Socket Hd.	2	237-6144-00
	Item 15 requires: #10-32 Nylon Stop Nut (Qty. 1) ***Flipper Link Side Only*** (240-5203-00) and #10 Split Lock Washer (Qty. 1) ***Switch Actuator Side Only*** (244-5003-00)		
	Tool required for Item 15: **5/32"** *or* **4mm Allen Wrench**		

Flipper Rebuild Parts for Easier Installation, Save $:

FRP 1 — **FLIPPER BASE PLATE KIT (LEFT) :** *Includes Item **1** pre-threaded >+< Securing Hardware for Items **2, 3, 6 & 8.*** 515-6617-**01**

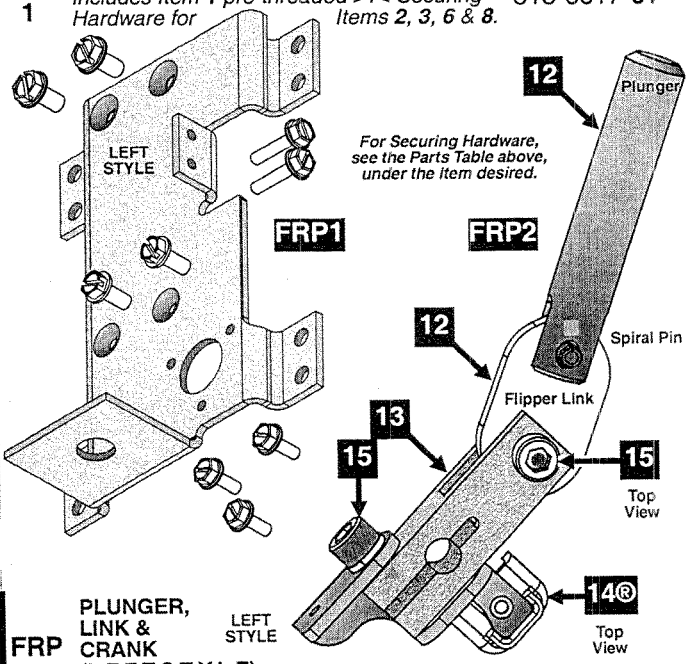

FRP 2 — **PLUNGER, LINK & CRANK (LEFT STYLE) ASSEMBLY :** *Includes Items **12, 13, 14 & 15** (comes assembled).* 515-7203-**01**

FRP 3 — **FLIPPER (LEFT) REBUILD KIT :** *Includes Items **6, 10 AND** above **FRP2*** 500-6307-**10**

*Item 14® is also shown separated from Item **13**, Crank Bar, for clarity.*

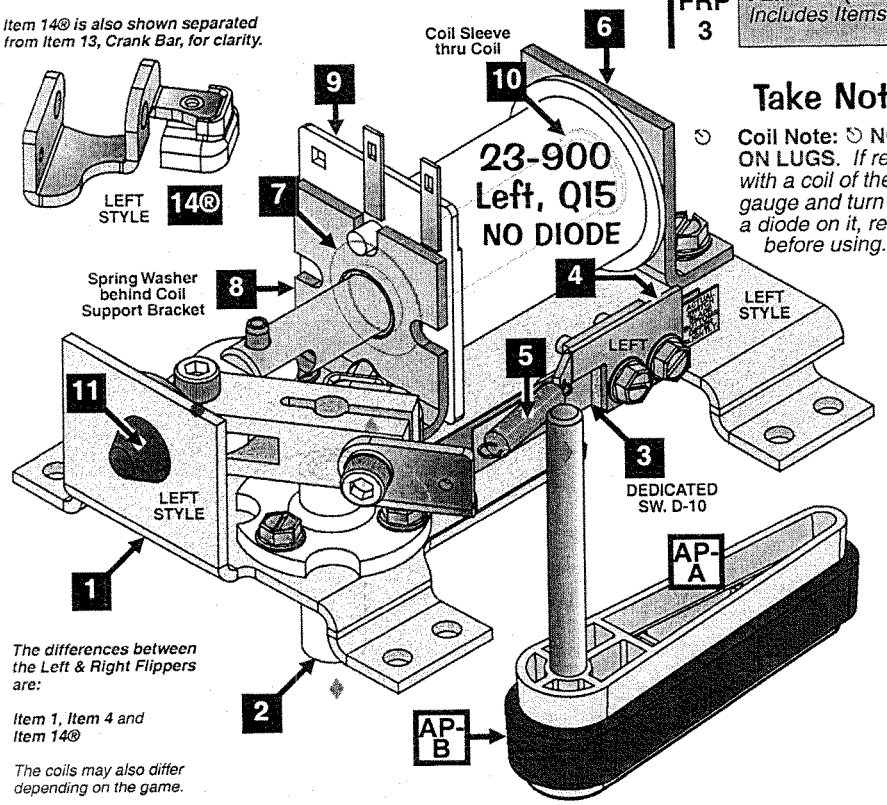

The differences between the Left & Right Flippers are:

Item 1, Item 4 and Item 14®

The coils may also differ depending on the game.

Take Note:

↻ **Coil Note:** ↻ **NO DIODE ON LUGS.** *If replacing with a coil of the same gauge and turn & it has a diode on it, remove it before using.*

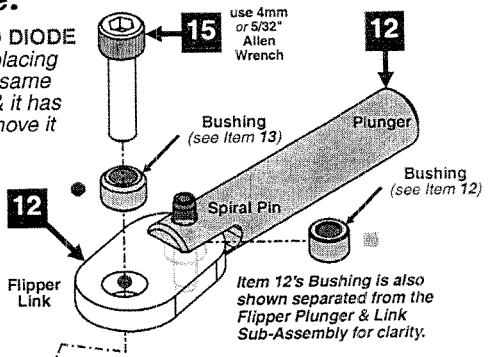

Item 12's Bushing is also shown separated from the Flipper Plunger & Link Sub-Assembly for clarity.

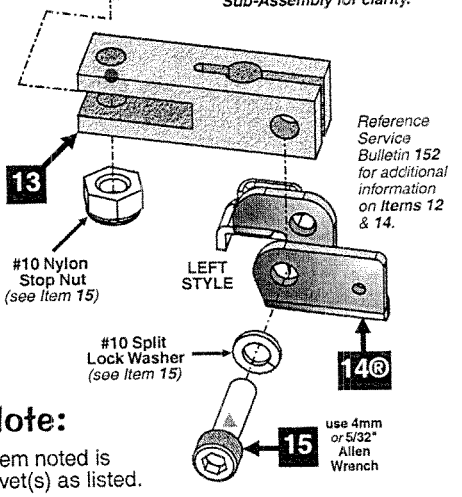

*Reference Service Bulletin **152** for additional information on Items **12** & **14**.*

ASSOCIATED PARTS ARE NOT INCLUDED WITH THE ABOVE ASSEMBLY.

Nr.	ASSOCIATED PART(S)	QTY.	SPI PART Nr.
AP-A	**YELLOW** Flipper Bat & Shaft Asm. (Non-Knurled End) ***without*** *Rubber Ring*	1	515-5133-**06**-06
AP-B	Large Flipper **BLACK** Rubber Ring	1	545-5277-00

Take Note:

® "R" indicates Item noted is secured with rivet(s) as listed.

Assemblies & Ramps

Flipper (Right) Assembly, 500-6543-05-ND (Items 1-15)
and Associated Parts: Yellow Flipper Bat & Shaft Asm., 515-5133-06-06 (Items AP-A / AP-B)

Nr.	FLIPPER (RIGHT) PARTS	QTY.	SPI PART Nr.
1	Flipper Base Plate (**RIGHT**)	1	*See **FRP1***
	Item 1 is secured below by: #8 X 1/2" SHWH AB (Zinc) (Qty. 8) (234-5101-00)		
	Ordering Note : Individual Part (535-7275-00) is not prethreaded,** see Item **FRP1.		
2	Flipper Bat Bushing (White Plastic) .25" ø I.D.	1	545-5070-00
	Item 2 is secured to Item 1 by: #6-32 X 3/8" HWH Swage (Ser.) Zc. (Qty. 3) (237-5976-02)		
3	Power (EOS / End-of-Stroke) Switch	1	180-5149-00
	Item 3 is secured to Item 1 by: #6-32 X 5/8" HWH Swage (Ser.) Zc. (Qty. 2) (237-5976-04)		
4	Sw. Plate/Spring Return Brkt. (**RIGHT**)	1	535-7354-**00**
5	Flipper Return Spring	1	265-5035-00
6	Coil Stop Bracket Sub-Assembly	1	515-6308-01
	Item 6 is secured to Item 1 by: #10-32 X 3/8" SHWH Swage (Serr) Zinc (Qty. 2) (237-5985-00) **and** #10 Split Lock Washer (Qty. 2) (244-5003-00)		
7	Spring Washer (17/32" ID X 3/4" X 1")	1	269-5002-00
8	Coil Support Bracket	1	535-7356-00
	Item 8 is secured to Item 1 by: #8-32 X 3/8" HWH Swage (Ser.) Zc. (Qty. 2) (237-5975-00)		
9	Coil, 23-900 [NO DIODE] BLUE	1	090-5020-30
	COIL DOES NOT REQUIRE A DIODE. SEE ↻ COIL NOTE PREV. PAGE FOR DETAILS.		
10	Coil Sleeve	1	545-5388-00
11	Deflector Pad (Bumper)	1	545-5428-00
12	Flipper Plunger & Link Sub-Assy.	1	515-6304-03
	For Individual Items use : Flipper Plunger (**530-5349-01**) **and** Plunger "Flipper" Link (**545-5611-01**) **and is secured to the Plunger by:** Bushing, .16" ø ID X .281" ø OD X .187" (Qty. 1) (530-5532-00) **and** Spiral Pin ø 5/32" X 3/4" Lg. (Qty. 1) (251-5015-02)		
13	Crank Bar (Pawl)	1	530-5070-02
	Item 13 requires: Bushing, .192" ø ID X .312" ø OD X .195" (Qty. 1) (530-5139-00)		
14®	Switch Actuator (**RIGHT**) Sub-Assy.	1	515-7257-**00**
	For Individual Items use : Actuator & Spring Bracket (LEFT) (**535-9038-01**) **and** ® Switch Actuator (White Plastic) (**545-5612-00**) **and is secured to the Bracket by:** Rivet, 1/8" ø X 1/4" Lg. (Qty. 1) (249-5003-00)		
15	Set Screw: #10-32 X 3/4" Socket Hd.	2	237-6144-00
	Item 15 requires: #10-32 Nylon Stop Nut (Qty. 1) ***Flipper Link Side Only*** (240-5203-00) **and** #10 Split Lock Washer (Qty. 1) ***Switch Actuator Side Only*** (244-5003-00)		
	Tool required for Item 15: **5/32"** *or* **4mm Allen Wrench**		

Flipper Rebuild Parts for Easier Installation, Save $:

FRP 1 **FLIPPER BASE PLATE KIT (R I G H T) :** *Includes Item **1** pre-threaded >+< Securing Hardware for Items **2, 3, 6 & 8.*** 515-6617-**00**

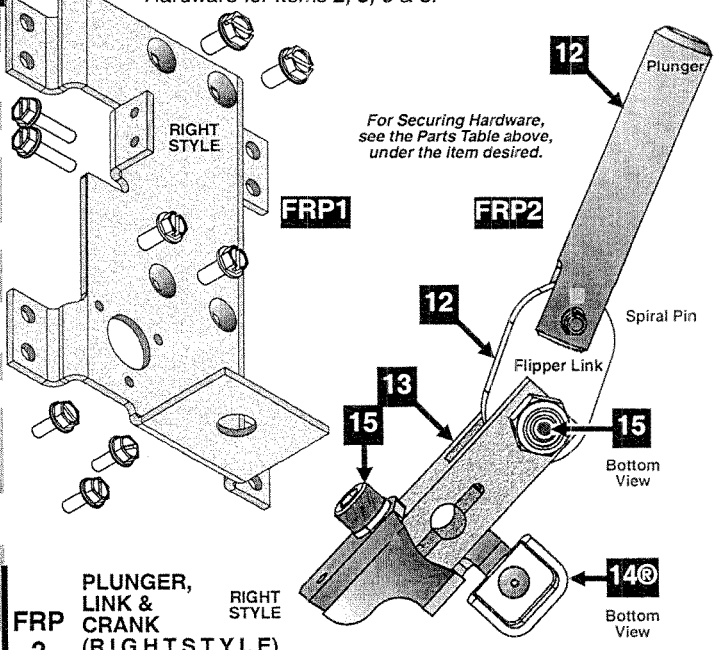

FRP 2 **PLUNGER, LINK & CRANK (R I G H T S T Y L E) ASSEMBLY :** *Includes Items **12, 13, 14 & 15** (comes assembled).* RIGHT STYLE 515-7203-**00**

FRP 3 **FLIPPER (RIGHT) R E B U I L D K I T :** *Includes Items **6, 10 AND** above **FRP2*** 500-6307-**00**

*Item 14® is also shown separated from Item **13, Crank Bar,** for clarity.*

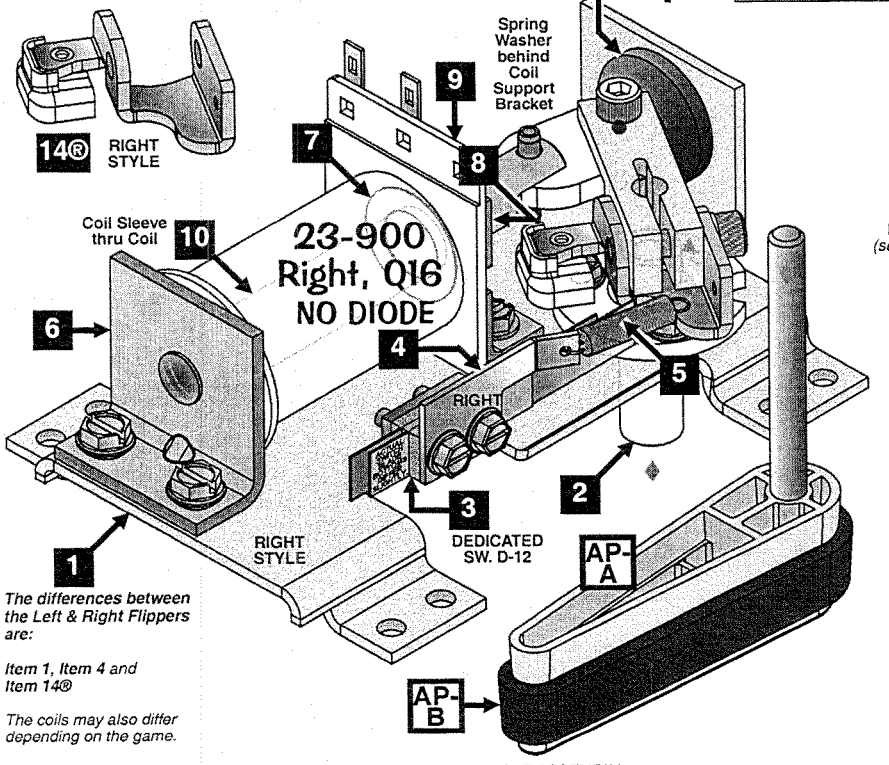

The differences between the Left & Right Flippers are:

Item 1, Item 4 and Item 14®

The coils may also differ depending on the game.

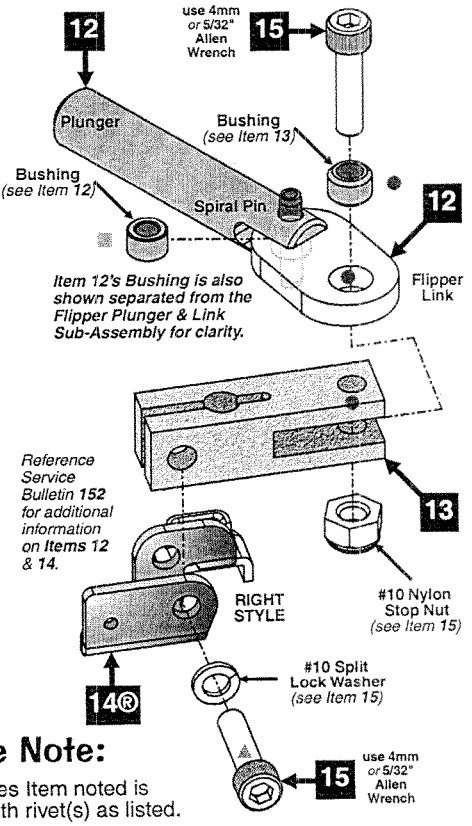

ASSOCIATED PARTS ARE NOT INCLUDED WITH THE ABOVE ASSEMBLY.

Nr.	ASSOCIATED PART(S)	QTY.	SPI PART Nr.
AP-A	**YELLOW** Flipper Bat & Shaft Asm. (Non-Knurled End) ***without** Rubber Ring*	1	515-5133-**06**-06
AP-B	Large Flipper **BLACK** Rubber Ring	1	545-5277-00

Take Note:

® "R" indicates Item noted is secured with rivet(s) as listed.

Assemblies & Ramps

Left, Right & Bottom Bumper & Switch Individual Parts Only (Items 1-18)

and Associated Part: See Parts Table Below.

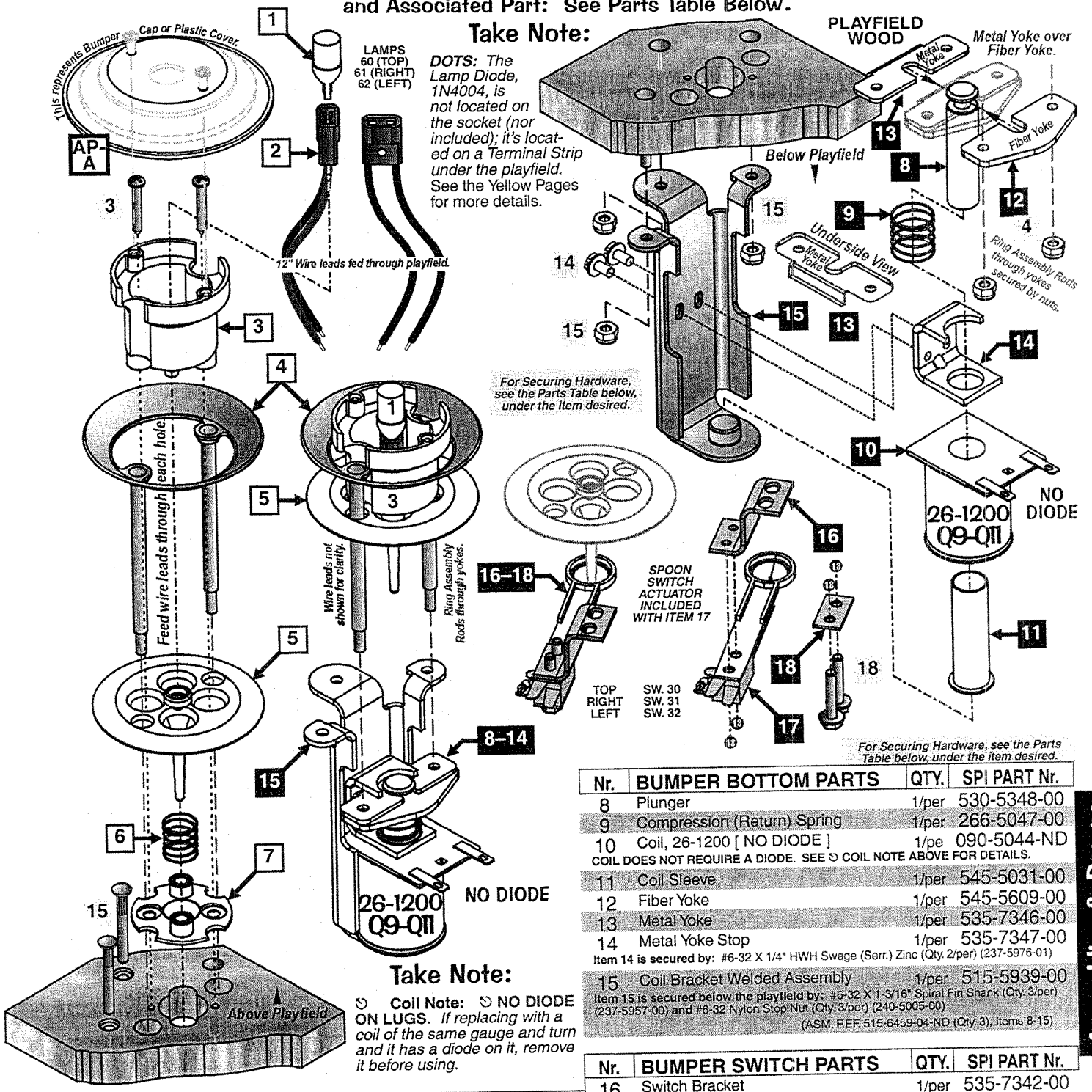

For Securing Hardware, see the Parts Table below, under the item desired.

Nr.	BUMPER BOTTOM PARTS	QTY.	SPI PART Nr.
8	Plunger	1/per	530-5348-00
9	Compression (Return) Spring	1/per	266-5047-00
10	Coil, 26-1200 [NO DIODE]	1/pe	090-5044-ND
	COIL DOES NOT REQUIRE A DIODE. SEE ↻ COIL NOTE ABOVE FOR DETAILS.		
11	Coil Sleeve	1/per	545-5031-00
12	Fiber Yoke	1/per	545-5609-00
13	Metal Yoke	1/per	535-7346-00
14	Metal Yoke Stop	1/per	535-7347-00
	Item 14 is secured by: #6-32 X 1/4" HWH Swage (Serr.) Zinc (Qty. 2/per) (237-5976-01)		
15	Coil Bracket Welded Assembly	1/per	515-5939-00
	Item 15 is secured below the playfield by: #6-32 X 1-3/16" Spiral Fin Shank (Qty. 3/per) (237-5957-00) and #6-32 Nylon Stop Nut (Qty. 3/per) (240-5005-00)		
	(ASM. REF. 515-6459-04-ND (Qty. 3), Items 8-15)		

Take Note:

↻ **Coil Note:** ↻ **NO DIODE ON LUGS.** *If replacing with a coil of the same gauge and turn and it has a diode on it, remove it before using.*

Nr.	BUMPER SWITCH PARTS	QTY.	SPI PART Nr.
16	Switch Bracket	1/per	535-7342-00
	Item 16 is secured by: #8 X 1/2" HWH AB (Zinc) (Qty. 2/per) (234-5101-00)		
17	Bumper Stack (Blade) Switch Assy.	1/per	180-5015-04
	Included with Item 17: Spoon Switch Actuator (**545-5610-02**). Switch has a Diode (1N4004) (112-5003-00). *Can be replaced with (1N4001) (112-5001-00).*		
18	Switch Body Protect Plate	1/per	535-7344-00
	Items 17 & 18 are secured by: #6-32 X 3/4" HWH Swage (Serr) Zc. (Qty. 2) (237-5976-05)		
	Can substitute Item 17 with 180-5015-05 (ASM. REF. 515-6459-09/R (Qty. 3), Items 16-18)		

Nr.	BUMPER TOP PARTS	QTY.	SPI PART Nr.
1	LED Module (WHT) (6.3v) Wedge Base	1/per	112-5024-08
2	Wedge Base Socket	1/per	077-5206-00
3	Bumper Body	1/per	545-5197-00
	Item 3 is secured above the P/F by: #5 X 7/8" PRH AB (Zinc) (Qty. 2/per) (237-5826-00)		
4	Ring Assembly	1/per	515-5085-00
	Item 4 is secured by: #6-32 Nylon Stop Nut (Qty. 2/per) (240-5005-00)		
5	Bumper Skirt (Switch Actuator)	1/per	545-5607-00
6	Bumper Skirt Compression Spring	1/per	266-5048-00
7	Bumper Base	1/per	545-5195-00
	(ASM. REF. 515-6459-01L (Qty. 3), Items 1-7		

The Top & Bottom Assemblies are secured together by hardware noted in Item 4.

ASSOCIATED PARTS **ARE NOT INCLUDED** WITH THE ABOVE ASSEMBLIES.

Nr.	ASSOCIATED PART(S)	QTY.	SPI PART Nr.
AP-A	Kit: Plastics *(includes -10, -11 & -12)*	1	803-5000-A2
	Note: *Individual Plastics (830-6071-XX) are not available individually, ordering of kit is required.*		
	Item AP-A is secured Item 3 by: #5 X 7/8" PRH AB (Zinc) (Qty. 2/per) (237-5826-00)		

Assemblies & Ramps

b6

Slingshot (Left & Right) Assemblies, 500-5849-00-ND (Qty. 2) (Items 1-9)

Nr.	SLINGSHOT PARTS	QTY.	SPI PART Nr.
1	Slingshot Bracket Assembly	1/per	515-5339-01
	Item 1 is secured below the playfield by: #8 X 1/2" SHWH AB (Zc.) (Qty. 3) (234-5101-00)		
2	Coil Retaining Bracket	1/per	535-5203-03
	Item 2 is secured to Item 1 by: #8-32 X 3/8" PPH MS (Sems) (Qty. 2) (232-5301-00)		
3	Coil, 23-800 [NO DIODE]	1/per	090-5001-ND
	COIL DOES NOT REQUIRE A DIODE. SEE ⟲ COIL NOTE BELOW FOR DETAILS.		
4	Coil Sleeve	1/per	545-5031-00
5	Plunger & Link Assembly	1/per	515-5338-00
	For Individual Items use : Plunger 2" Lg. (**530-5025-01**), Plunger Link (**545-5293-00**) and Roll Pin 1/8" ø x 5/8" Lg. (**251-5008-00**) **The Plunger Link is secured to the Riveted Arm by:** Retaining Ring, 1/4" ø Shaft (Qty. 1) (270-5002-00)		
	*Ordering Note: If **515-5338-00** is unavailable, order the individual part(s) actually required.*		

Nr.	SLINGSHOT PARTS	QTY.	SPI PART Nr.
6	Compression (Return) Spring	1/per	266-5020-00
7	Slingshot Stack (Blade) Switch	2/per	180-5054-00
	Only 1 of the 2 Switches has a Diode (1N4004) (112-5003-00). *See Note Below on Drawing. Can be replaced with (1N4001) (112-5001-00).*		
8	Switch Body Protect Plate	2/per	535-5045-00
	Items 7 & 8 are secured to Item 1 by: #6-32 X 5/8" HWH Swage (Qty. 4) (237-5976-04)		
9®	Riveted Arm & Tip Assembly	1/per	515-5340-01
	For Individual Parts use (requires drilling out rivet & rereviting) : Arm (**515-5341-01**), Kicker Tip (**545-5216-01**) and Rivet, 1/8" ø x 1/4" Lg. (**249-5003-00**) **The Riv. Arm is secured to Item 1 by:** Retaining Ring, 1/4" ø Shaft (Qty. 1) (270-5002-00)		
	*Ordering Note: If **515-5340-01** is unavailable, order the individual part(s) actually required.*		

*Ordering Note: If **500-5849-00-ND** is unavailable, order the individual part(s) actually required. This assembly is identical to **500-5849-02-ND** with the exception of **Item 3**, which uses a Coil, 27-1500 [NO DIODE] (**090-5004-ND**) instead.*

Take Note:

⟲ **Coil Note: ⟲ NO DIODE ON LUGS.** *If replacing with a coil of the same gauge and turn and it has a diode on it, remove it before using.*

® "R" indicates Item noted is secured with rivet(s) as listed.

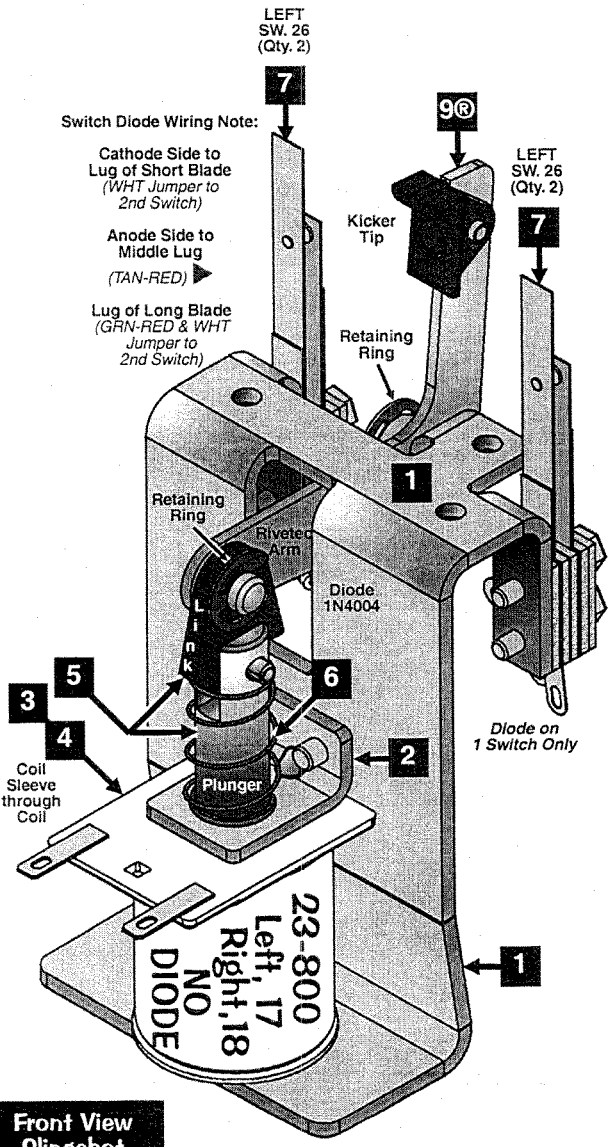

Front View Slingshot (Left)

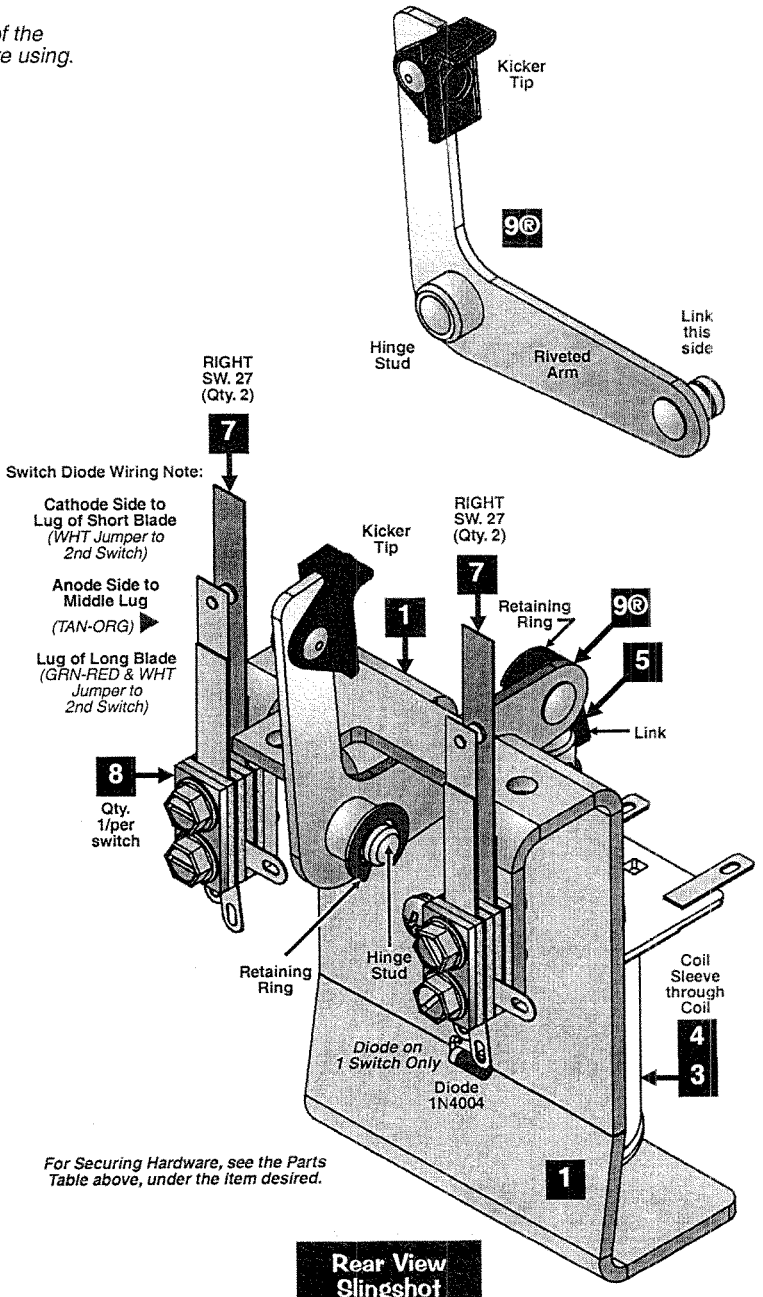

For Securing Hardware, see the Parts Table above, under the item desired.

Rear View Slingshot (Right)

Assemblies & Ramps

1-Bank Drop Target Assembly, 500-7029-01 (Items 1-14) Continued
and Associated Part : See Parts Table Below [Different Views on the previous page.]

Nr.	1-BANK DROP TRGT. PARTS	QTY.	SPI PART Nr.
1	Frame & Pem Weldment, 1-Bank D/T	1	515-7604-01
	Item 1 is secured under the playfield by: #8 X 1/2" SHWH AB (Zc.) (Qty. 4) (234-5101-00)		
2	Target Rest Ledge (Blk.), 1-Bank D/T	1	545-6163-01
	Item 2 is secured to Item 1 by: #4-40 X 1/4" PPH MS (Zinc) (Qty. 2) (237-6169-00)		
3	Drop Target (Black Plastic) Rollover	1	545-6162-00
4	Compression (Short) Spring	1	266-5089-00
	Items 3 & 4 are secured to Item 1 @ top by: Washer, 1/2" X 17/64" X .03" (Qty. 2) (242-5091-00) and Retaining Ring, 1/4" ø (Qty. 1) (270-5002-00) FRAME PEM —> WASHER —> SPRING —> WASHER —> RETAINING RING —> OPTO PCB —> SCREW		
	Item 3 is secured to Item 1 @ bottom by: Washer, 1/2" X 17/64" X .03" (Qty. 1) (242-5091-00) and Retaining Ring, 1/4" ø (Qty. 1) (270-5002-00)		
5	Reset (Long) Spring (Red Dipped)	1	265-5003-02
6	PCB, Slotted OPTO X1	1	520-5252-01
	Item 6 is secured to Item 1 by: #6-32 X 3/8" PPH MS (Zinc) (Qty. 2) (237-5501-00)		
7	Compression (Return) Spring	1	266-5020-00
8	Steel Plunger with End Cap	1	530-5757-00
9	Bracket, Target Lift (1-Bank)	1	535-9760-01A
	Item 9 is secured to Item 8 Plunger by: #10-32 X 3/8" SHWH Swage (Zinc) Wax (Qty. 1) (237-5985-00) ////// TARGET HEIGHT ADJUSTMENT: //////		
	Item 9 is adjusted through Item 1 by: #8-32 X 1/2" PPH MS (Zinc) (Qty. 2) (237-5602-00)		
10	Coil Mounting Bracket [1-Bank Style]	1	535-9777-01
	Item 10 is secured to Item 1 by: #8-32 Nylon Stop Nut (Qty. 2) (240-5102-00)		
11	Spring Washer (17/32" ID X 3/4" X 1")	1	269-5002-00
12	Coil, 25-1240 [NO DIODE]	1	090-5034-ND
	COIL DOES NOT REQUIRE A DIODE. SEE ↻ COIL NOTE ABOVE FOR DETAILS.		
13	Coil Sleeve (Formost #10-7077)	1	545-5076-01
14	Bracket, Plunger Stop	1	535-9959-00
	Item 14 is secured to Item 1 by: #8-32 Nylon Stop Nut (Qty. 2) (240-5102-00)		

Ordering Note: If 500-7029-01 is unavailable, order the individual part(s) actually required (for cable wiring, use Part Number 036-5523-15-93).

ASSOCIATED PARTS ARE NOT INCLUDED WITH THE ABOVE ASSEMBLY.

Nr.	ASSOCIATED PART(S)	QTY.	SPI PART Nr.
AP-A	*Kit:* **Decals** *(incl. -26 Drop Target)*	1	802-5000-93

Note: Individual Decals (820-6394-XX) are not available individually, ordering of kit is required.

Take Note:

↻ **Coil Note:** ↻ NO DIODE ON LUGS. *If replacing with a coil of the same gauge and turn and it has a diode on it, remove it before using.*

TARGET/PCB Side Asm'd View

For Securing Hardware, see the Parts Table ABOVE, under the item desired.

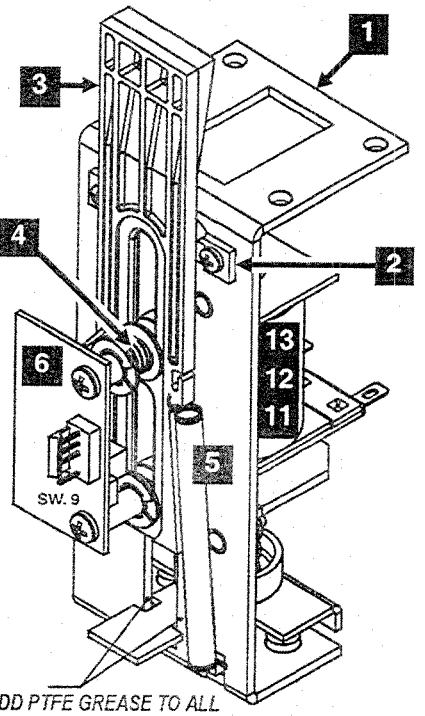

Securing hardware assembly order, see note under Item 4 in the Parts Table above.

ADD PTFE GREASE TO ALL CONTACT AREAS AROUND SLOT
P/N 000-0646-00 MAGNALUBE-G OR EQUIVALENT

Coil Side Assembled View

For Securing Hardware, see the Parts Table ABOVE, under the item desired.

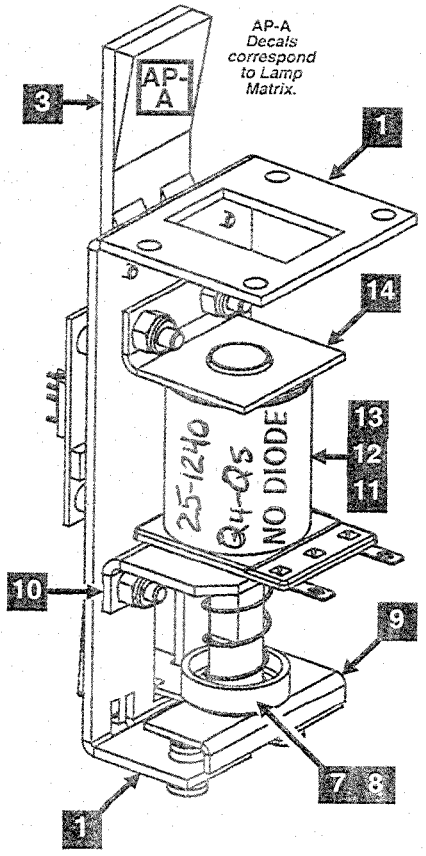

b8

1-Bank Drop Target Assembly, 500-7029-01 (Items 1-14)

[Different Views & Parts Table on the next page.]

Coil Side Exploded View

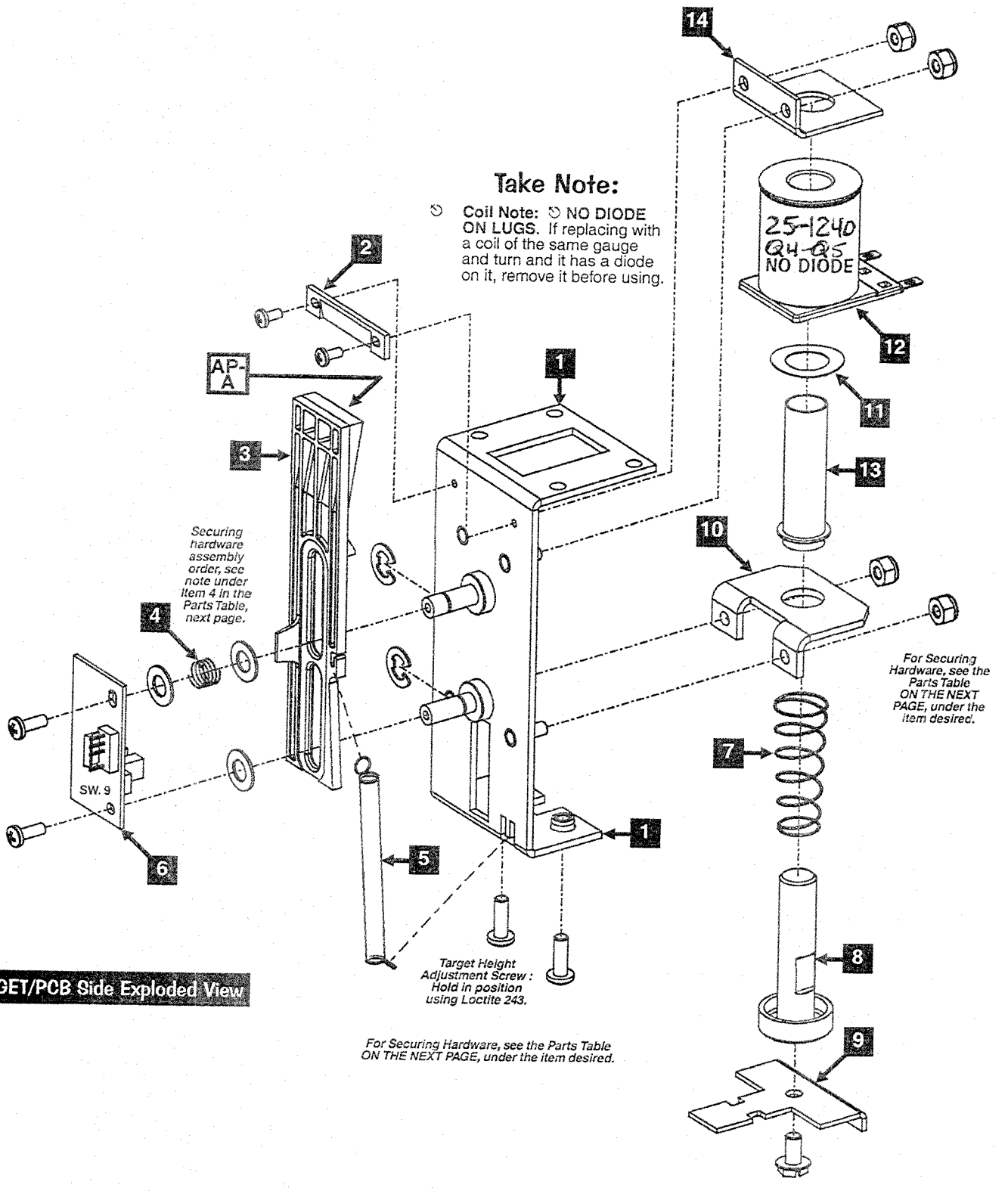

Take Note:

Coil Note: NO DIODE ON LUGS. If replacing with a coil of the same gauge and turn and it has a diode on it, remove it before using.

Securing hardware assembly order, see note under Item 4 in the Parts Table, next page.

For Securing Hardware, see the Parts Table ON THE NEXT PAGE, under the item desired.

Target Height Adjustment Screw : Hold in position using Loctite 243.

For Securing Hardware, see the Parts Table ON THE NEXT PAGE, under the item desired.

TARGET/PCB Side Exploded View

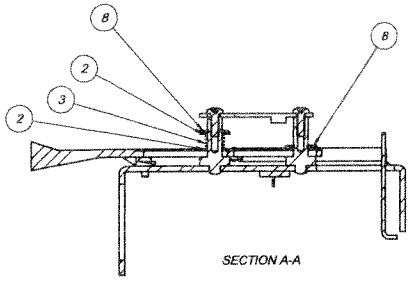

SECTION A-A

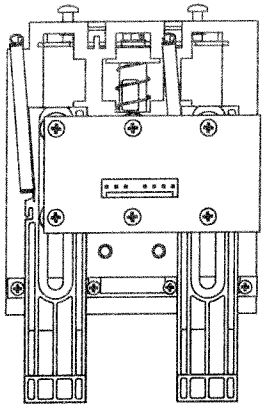

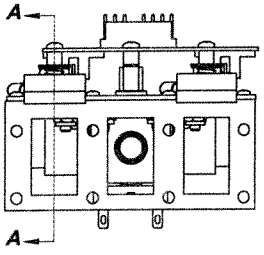

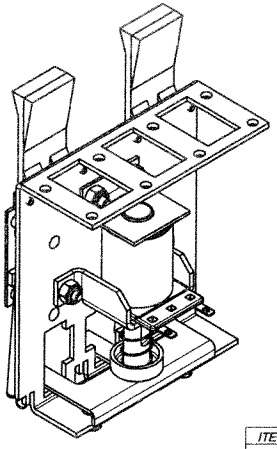

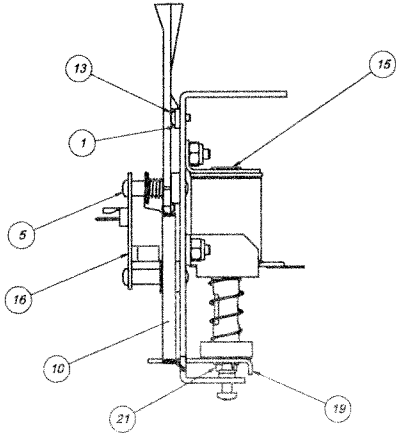

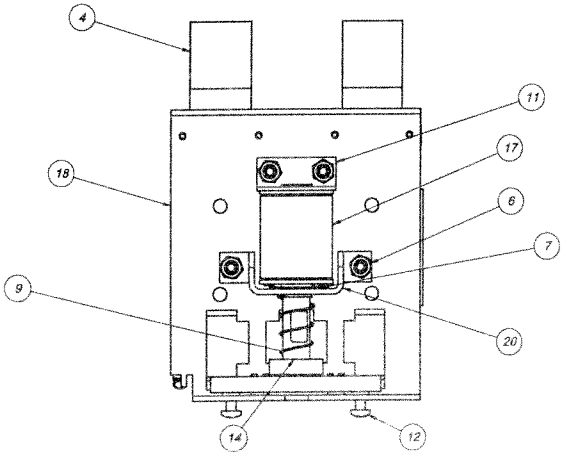

ITEM #	QTY	PART #	DESCRIPTION
1	1	545-6163-03	LEDGE, 3-BANK DROP TARGET
2	6	242-5091-00	WASHER, 1/2 X 17/64 X .03 - DT
3	2	266-5089-00	SPRING COMPRESSION - DT
4	2	545-6305-00	TARGET - ROLLOVER - BLACK
5	6	237-5501-00	SCREW, 6-32 X 3/8 PPH MS ZINC
6	4	240-5102-00	8-32 NYLON LOCK NUT
7	1	269-5002-00	SPRING WASHER
8	4	270-5002-00	RETAINING RING - 1/4"
9	1	266-5020-00	COMPRESSION SPRING-CONICAL
10	2	265-5003-02	TARGET RESET SPRING
11	1	535-9959-00	STOP BRKT
12	2	237-5602-00	SCREW, 8-32 X 1/2 PPH MS, ZINC
13	4	237-6169-00	SCREW, 4-40 X 1/4 PPH MS
14	1	530-5757-00	PLUNGER - D.T. ASSY.
15	1	545-5076-01	COIL SLEEVE
16	1	520-5252-03-A7	3 BANK 2 OPTO DROP TARGET PCB
17	1	090-5034-ND	COIL 25-1240 - NO DIODE
18	1	515-7604-03	DROP TARGET FRAME ASSY -3-BANK
19	1	535-9996-03	LIFT BRACKET - 3 BANK
20	1	535-9995-01	COIL BRACKET
NOT SHN	1	036-5542-00	DROP TARGET CABLE
NOT SHN	.1FT	605-5006-00	1/8" PVC TUBING
21	1	237-5985-00	10-32 X 3/8 SHWH SWAGE SCREW

3-BANK 2 DROP TARGET ASSEMBLY

500-7029-03-

ITEM NO.	PART NUMBER	DESCRIPTION	QTY.
1	535-9248-00	BRACKET	1
2	535-5203-03	COIL RETAINING BRACKET	2
3	090-5036-ND	COIL - 24-940, NO DIODE	1
4	545-5847-00	COIL SLEEVE	1
5	280-5014-00	ADJUSTABLE BUMPER/STOP	1
6	515-7659-00	PLUNGER ASSY, NYLON 1/4" TIP	1
7	266-5020-00	COMPRESSION SPRING-CONICAL	1
8	232-5300-00	SCREW, 8-32 X 1/4" PPH SEMS	4
9	240-5208-00	10-32 KEPS NUT	1

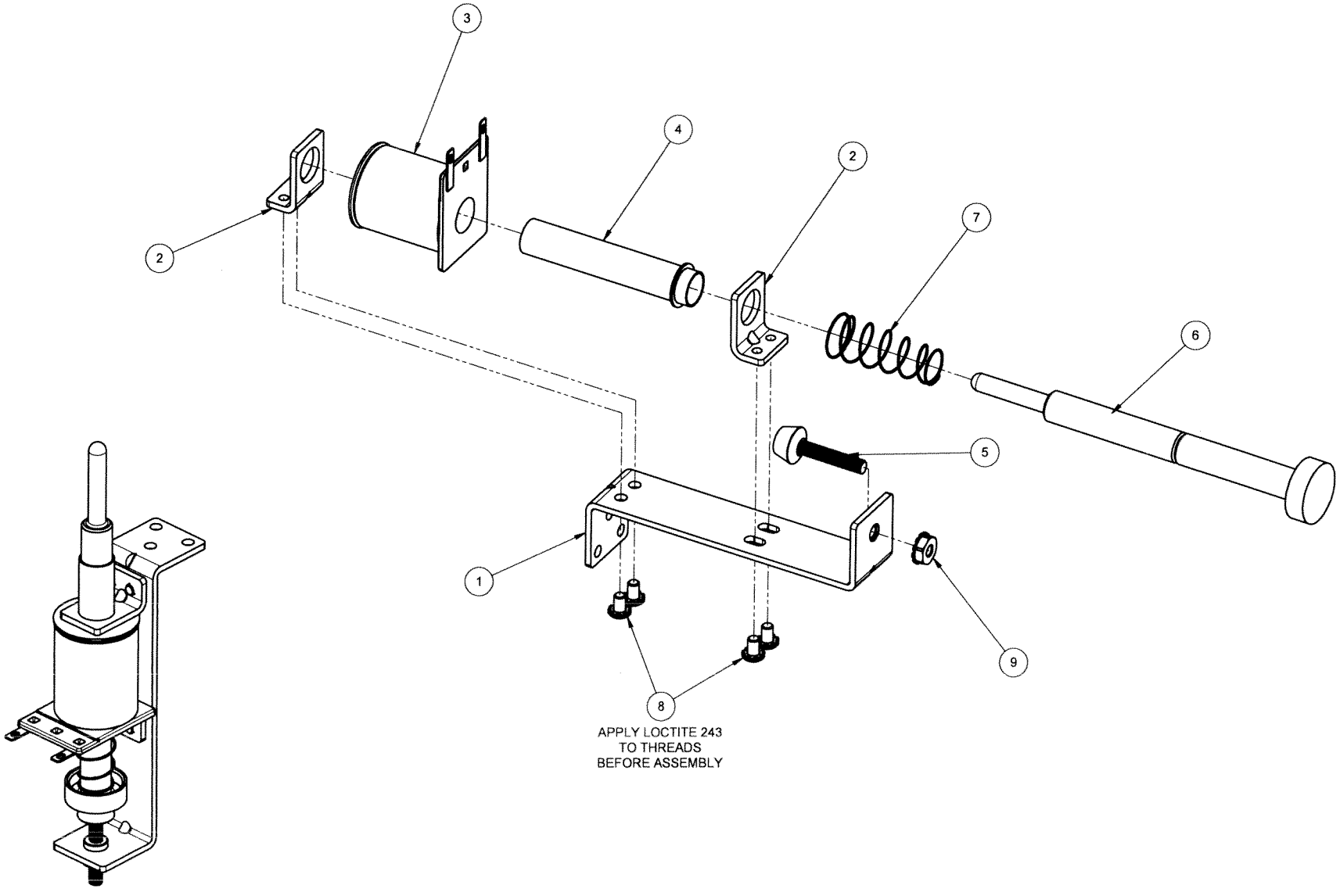

UP-POST ASSY, NO DIODE - HEAVY SPRING - 24

500-7094-02

ITEM NO.	PART NUMBER	DESCRIPTION	QTY.
1	830-6079-04A	BUTY #4A, RIGHT SLING UPPER - 24	1
2	550-5031-03	MINI MARS W/ EARS - AMBER SB	1
3	511-5202-01	ASSY, FLASH & CABLE, SLINGS - 24	1
4	232-5202-00	SCREW, 6-32 X 1/2" PPH MS SEMS	2
5	242-5001-00	#6 WASHER	2
6	240-5005-00	6-32 NYLOK STOP NUT	2
99*	605-5002-00	SHRINK TUBING	.125 FT.

* ITEM NOT SHOWN

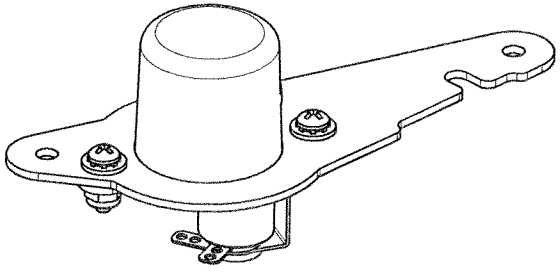

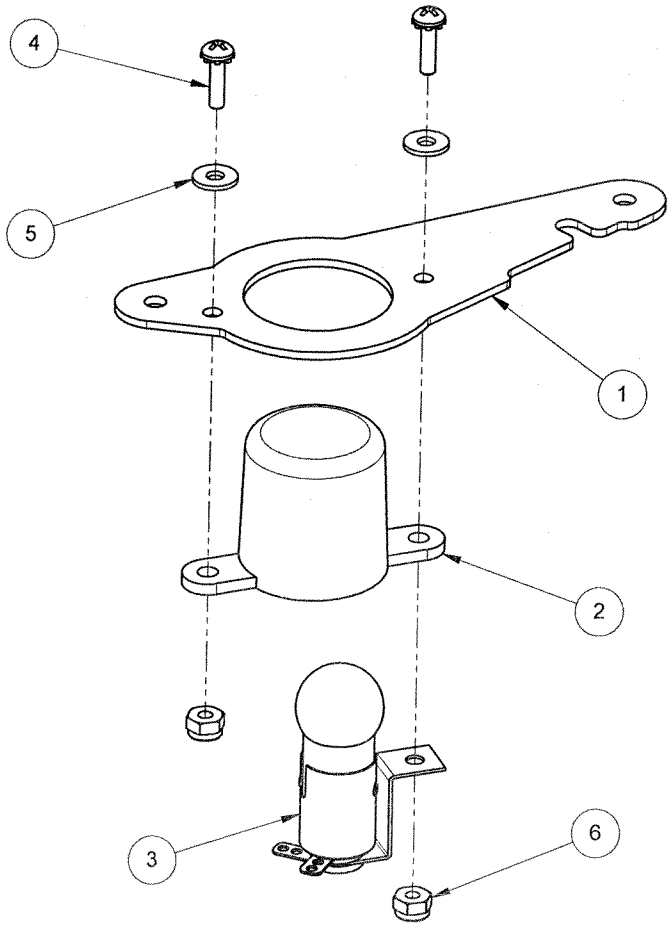

ASSEMBLY, BUTY #4A, R SLING - 24

511-5094-04A

ITEM NO.	PART NUMBER	DESCRIPTION	QTY.
1	830-6079-02A	BUTY #2A, LEFT SLING UPPER - 24	1
2	550-5031-03	MINI MARS W/ EARS - AMBER SB	1
3	511-5202-01	ASSY, FLASH & CABLE, SLINGS - 24	1
4	232-5202-00	SCREW, 6-32 X 1/2" PPH MS SEMS	2
5	242-5001-00	#6 WASHER	2
6	240-5005-00	6-32 NYLOK STOP NUT	2
99*	605-5002-00	SHRINK TUBING	.125 FT.

* ITEM NOT SHOWN

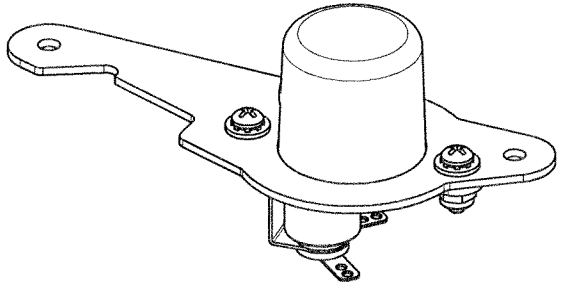

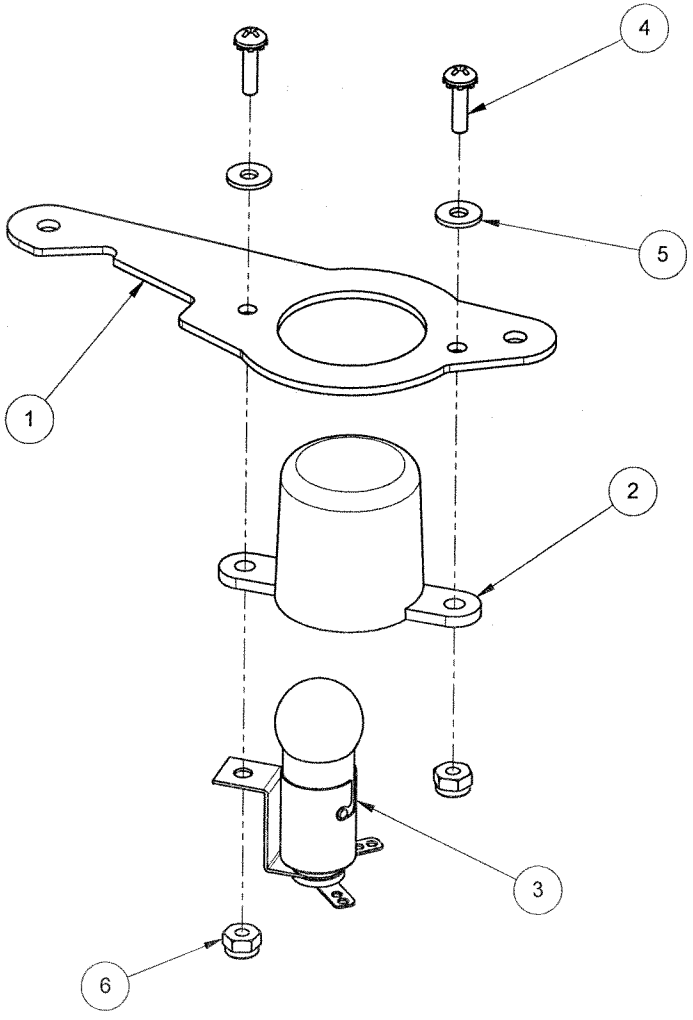

ASSEMBLY, BUTY #2A, L SLING - 24

511-5094-02A

DJ3

ITEM NO.	PART NUMBER	DESCRIPTION	QTY.
1	515-7666-00	BALL GUIDE #00 - RIGHT LANE - 24	1
2	550-5031-02	MINI MARS W/ EARS - RED SB	1
3	511-5202-02	ASSY, FLASH & CABLE, MID-RIGHT - 24	1
4	232-5201-00	SCREW, 6-32 X 3/8" PPH MS SEMS	1

BH

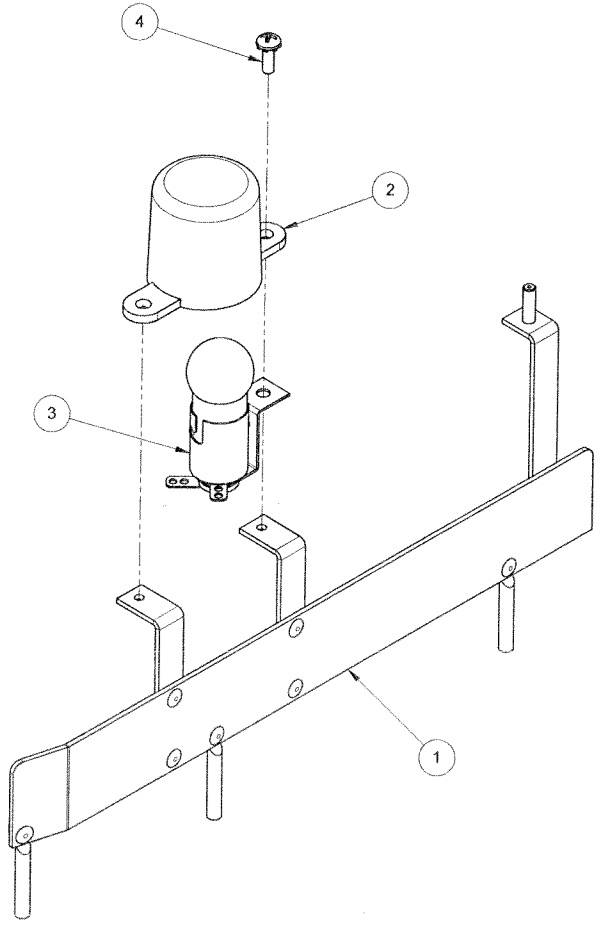

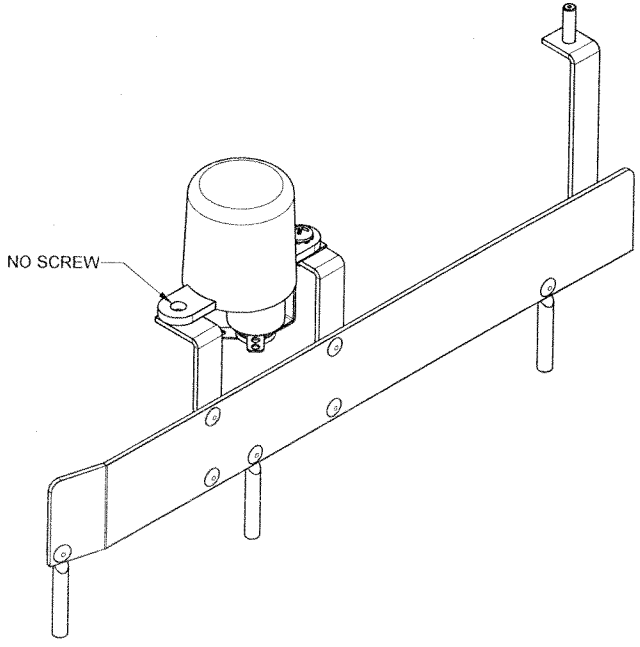

ASSEMBLY, BALL GUIDE #00 - 24

511-5085-00

ITEM #	QTY.	PART NUMBER	DESCRIPTION
1	1	535-0091-02	BALL GUIDE #2 - DT / RAMP - 24
2	1	626-5067-00	RUBBER BUMPER - BLUE - FASTENED
3	1	535-9648-00	BUMPER HOLDER - FASTENED
4	2	237-5983-02	SCREW, 4-40 x 1/4" PFH MS - BLACK

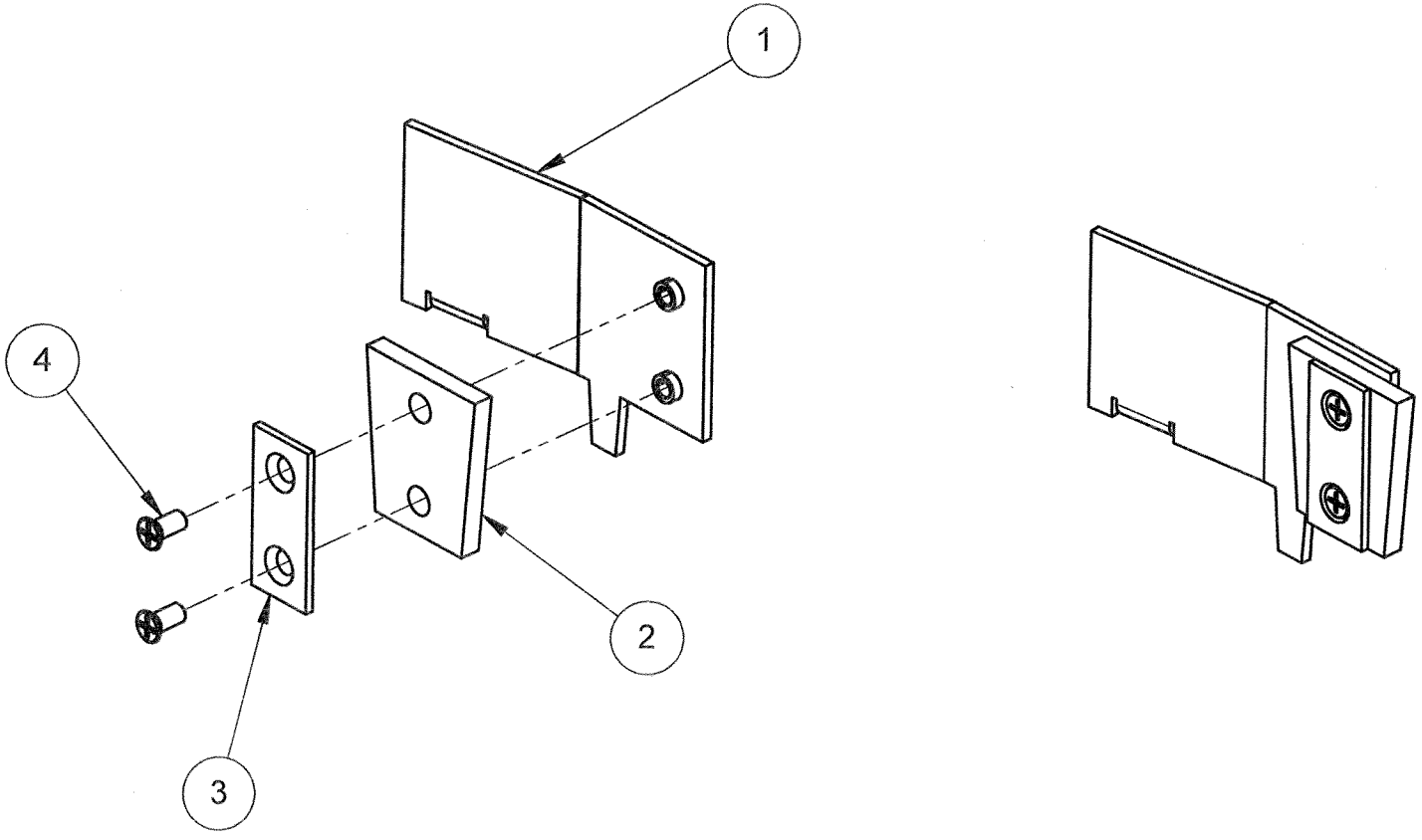

ASSEMBLY, BALL GUIDE #2 - 24

511-5085-02

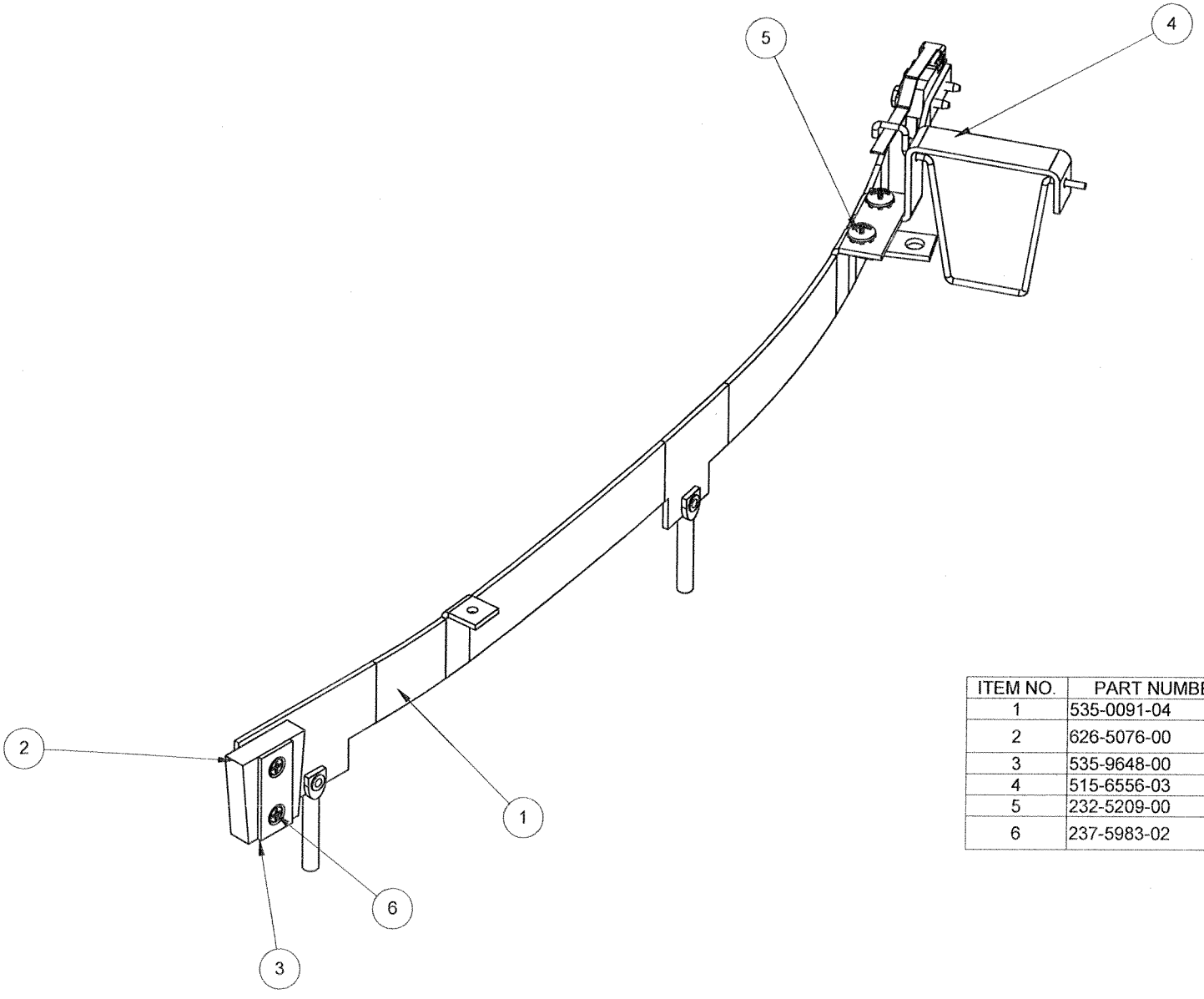

ITEM NO.	PART NUMBER	DESCRIPTION	QTY.
1	535-0091-04	BALL GUIDE #4, 24	1
2	626-5076-00	RUBBER BUMPER, 1/4" WEDGE - BLUE	1
3	535-9648-00	BUMPER HOLDER - FASTENED	1
4	515-6556-03	GATE ASSEMBLY	1
5	232-5209-00	SCREW, 6-32 X 3/16" PPH SEMS	2
6	237-5983-02	SCREW, 4-40 x 1/4" PFH MS - BLACK	2

BALL GUIDE ASSEMBLY #4 - 24

511-5085-04

ITEM NO.	PART NUMBER	DESCRIPTION	QTY.
1	830-6079-33	BUTY #33 - JET BODY - 24	1
2	510-5094-34	RIVETED ASSY, BUTY #34 - 24	1
3	510-5094-32	RIVETED ASSY, BUTY #32 - 24	1
4	249-5001-00	RIVET - 1/8 X 3/16	2
5	535-8941-07	BRACKET	2

* BUTY pieces are sold in the plastic set (803-5000-A7)

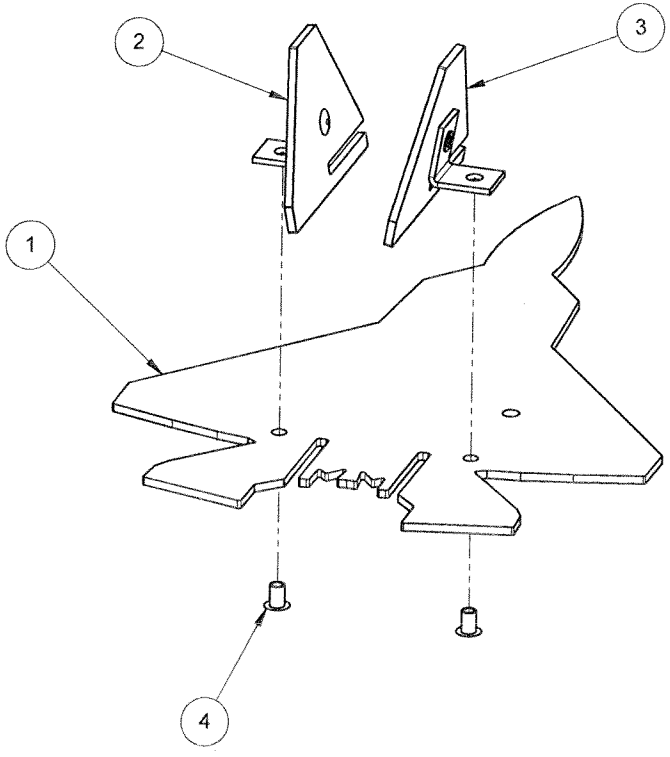

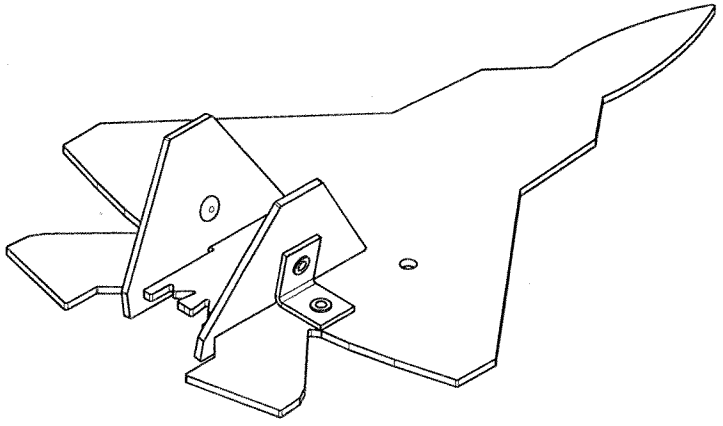

RIVETED ASSY, BUTY #33, JET - 24

510-5094-33

ITEM NO.	PART NUMBER	DESCRIPTION	QTY.
1	510-5094-89	RIVETED ASSY, BUTY #89, HELI - 24	1
2	254-5008-04	HEX SPACER - 3/4 "	1
3	232-5201-00	SCREW, 6-32 X 3/8" PPH MS SEMS	2
4	242-5001-00	#6 WASHER	2
5	830-6079-88	BUTY #88 - HELI BLADE - 24	1

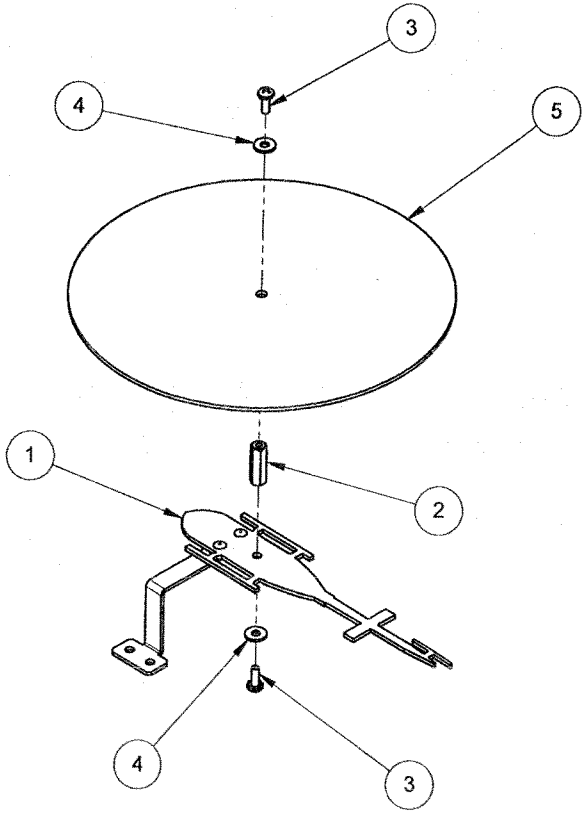

ASSEMBLY, BUTY #89, HELI - 24

511-5094-89

ITEM NO.	PART NUMBER	DESCRIPTION	QTY.
1	830-6079-89	BUTY #89 - HELICOPTER - 24	1
2	535-0297-00	BRACKET, HELICOPTER MOUNT, 24	1
3	249-5001-00	RIVET - 1/8 X 3/16	2

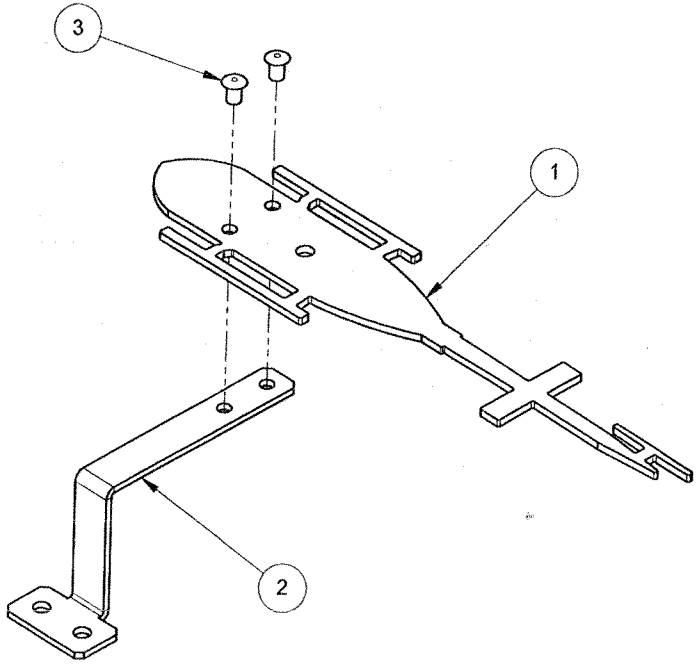

RIVETED ASSY, BUTY #89, HELI - 24

510-5094-89

ITEM NO.	PART NUMBER	DESCRIPTION	QTY.
1	535-0134-00	BRACKET, ELEC GATE, BK. PANEL MNT	1
2	090-5060-01-ND	MINI-COIL W/CORE, ND - 32-1250, YELLOW	1
3	535-9577-00	COVER, ELECTRIC GATE	1
4	242-5005-00	#8 WASHER	1
5	240-5102-00	8-32 NYLON LOCK NUT	1
6	535-5372-00	REBOUND HINGE PIN	1
7	535-9682-00	GATE - ELECTRIC (MAGNET)	1
8	530-5702-01	CLEVIS PIN W/ RING, 3/16"D X 1-1/2"	1
NOT SHN.	036-5543-00	CABLE - ELECTRIC GATE	1

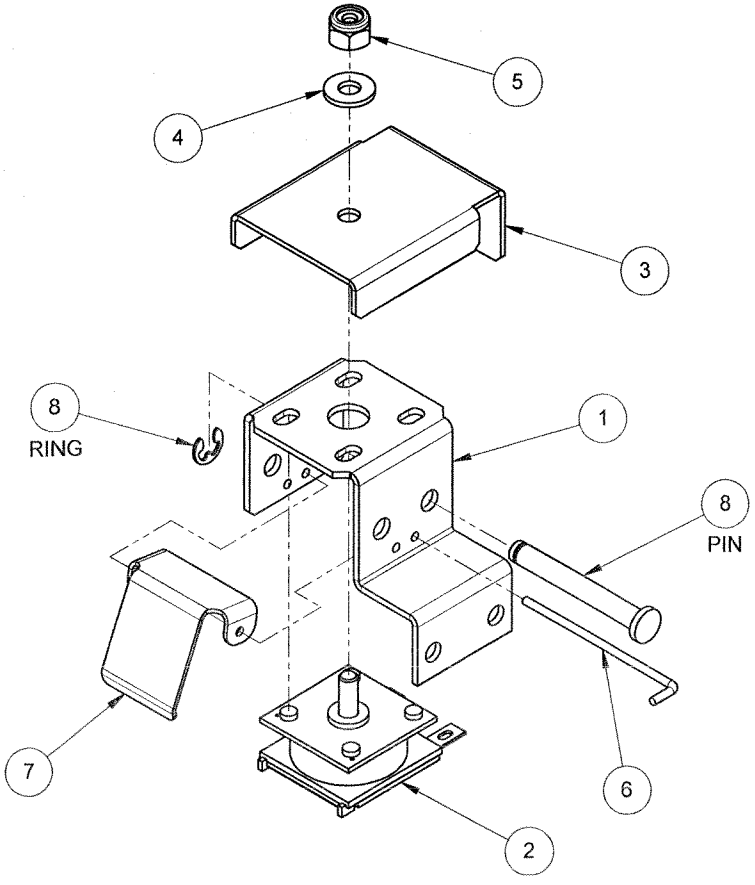

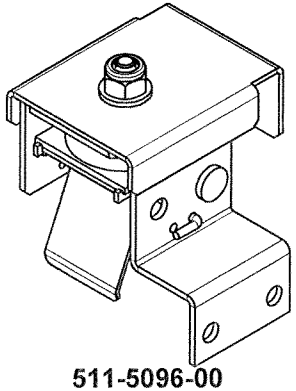

511-5096-00
"LEFT"

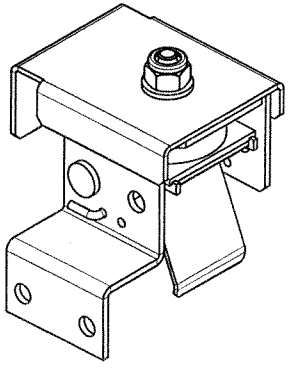

511-5096-01
"RIGHT"

ASSY, ELECTRIC GATE, BK. PANEL MNT

511-5096-XX

b20

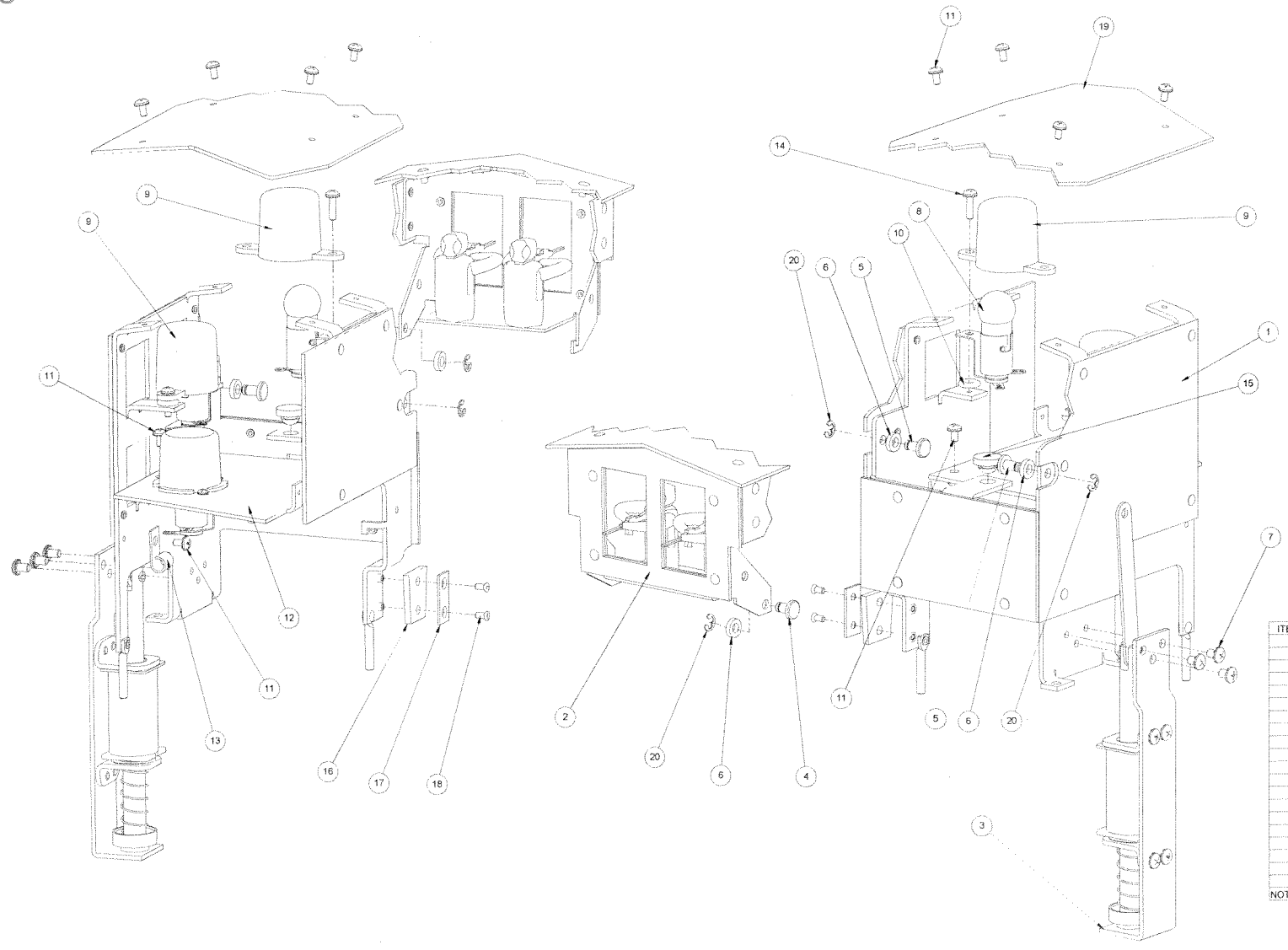

ITEM #	QTY	PART #	DESCRIPTION
1	1	510-5089-00	SAFE HOUSE RIVET ASSEMBLY
2	1	510-5090-00	DOOR-RIVET ASSEMBLY
3	1	511-5099-00	24-SAFE HOUSE VUK ASSEMBLY
4	1	530-5720-00	PIVOT PIN
5	2	530-5720-01	PIVOT PIN
6	3	254-5044-03	SPACER - 3/8 OD X #10 ID
7	3	232-5300-00	SCREW, 8-32 X 1/4" PPH SEMS
8	2	519-5101-00-HF	SOCKET/#89 BULB ASSY - HEAVY FILAMENT
9	2	550-5031-03	MINI MARS W/ EARS - AMBER SB
10	3	545-5348-17	7/16 O.D. RUBBER RING - BLACK
11	8	232-5200-00	SCREW, 6-32 X 1/4" PPH SEMS
12	1	511-5098-00	24-SAFE HOUSE FLASHER ASSEMBLY
13	1	040-5000-03	1/4" CABLE CLAMP
14	3	232-5202-00	SCREW, 6-32 X 1/2" PPH MS SEMS
15	1	545-5105-00	RUBBER BUMPER
16	1	626-5067-00	RUBBER BUMPER - BLUE - FASTENED
17	1	535-9648-00	BUMPER HOLDER - FASTENED
18	2	237-5983-02	SCREW, 4-40 x 1/4" PFH MS - BLACK
19	1	830-6079-78	FORMED SAFE HOUSE ROOF - BACK
20	3	270-5001-00	RETAINING E-RING, 3/16" SHAFT OD
NOT SHN	1	036-5534-17-A7	CABLE - 2ND FLOOR FLASH LAMPS

SAFEHOUSE ASSEMBLY - 24

500-7113-00

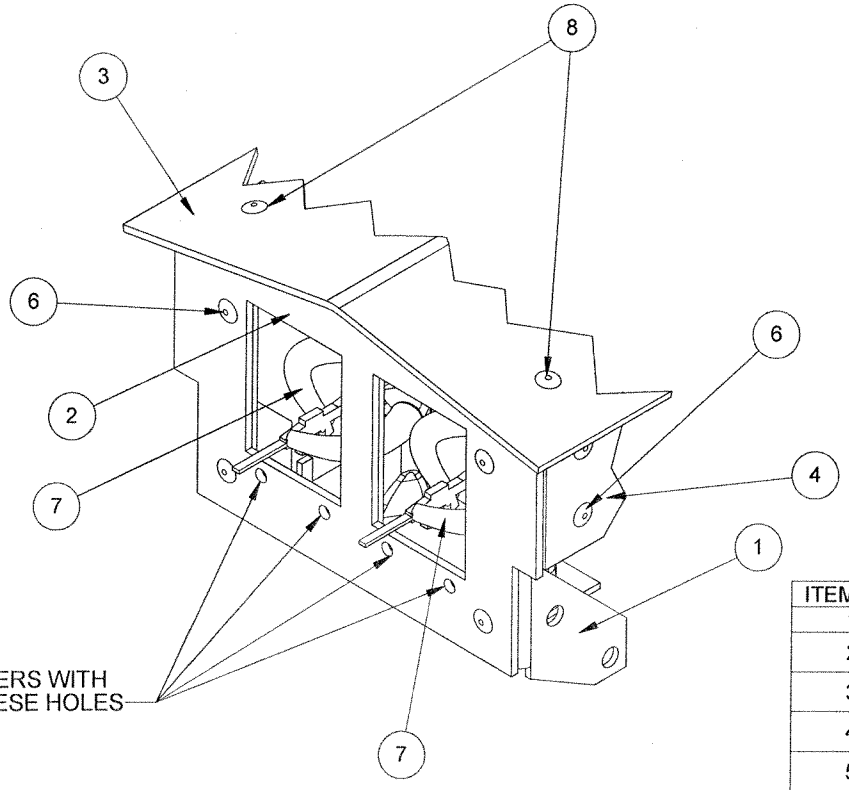

FASTEN EACH CHARACTERS WITH
WIRE TIES THROUGH THESE HOLES

ITEM NO.	PART NUMBER	DESCRIPTION	QTY.
1	535-0115-00	24-SAFE HOUSE DOOR	1
2	830-6079-93	BUTY #93 - SAFEHOUSE DOOR, FRONT	1
3	830-6079-79	FORMED SAFE HOUSE ROOF - FRONT	1
4	830-6079-94	BUTY #94 - SAFEHOUSE DOOR, RIGHT	1
5	830-6079-95	BUTY #95 - SAFEHOUSE DOOR, LEFT	1
6	249-5001-00	RIVET - 1/8 X 3/16	8
7	545-6319-02	CHARACTER - SAFEHOUSE	2
8	249-5023-00	POP RIVET - 1/8 X 1/4	2
NOT SHN.	040-5001-01	WIRE TIE - 4"	2

DOOR-RIVET ASSEMBLY

510-5090-00

B21

b22

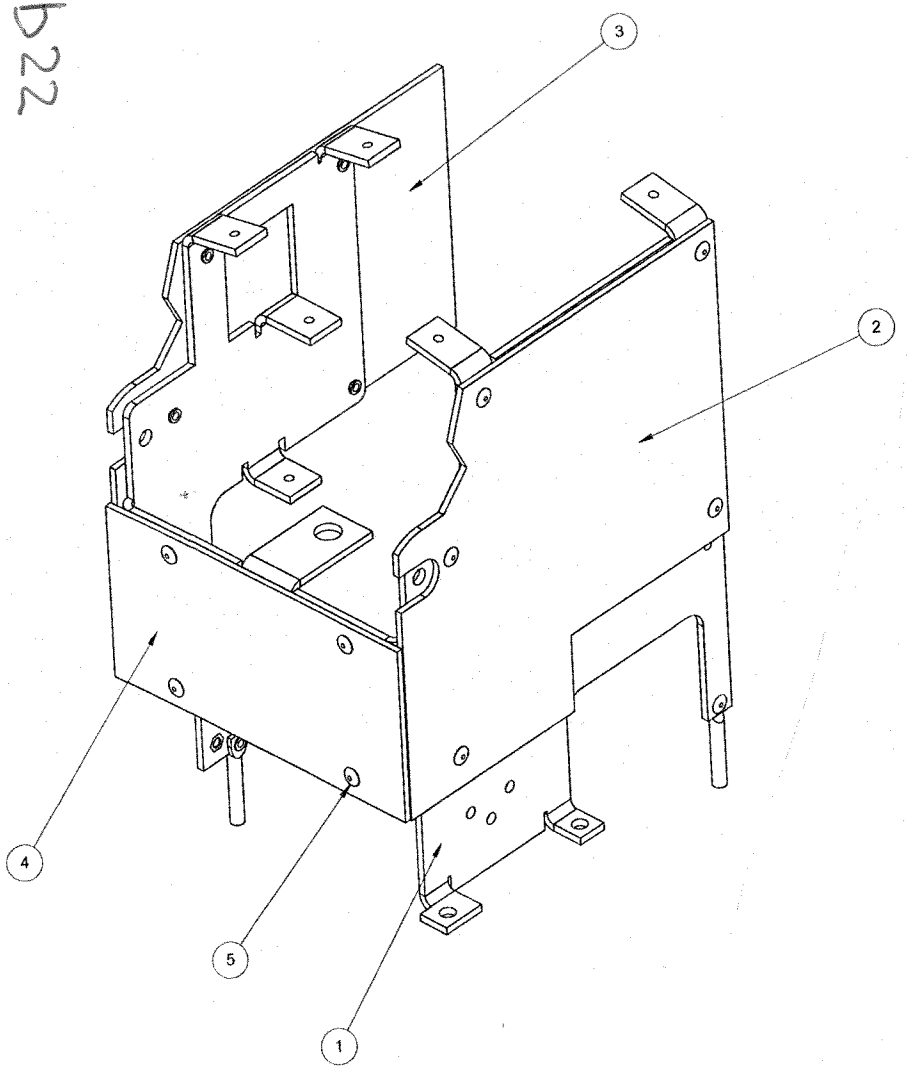

ITEM NO.	PART NUMBER	DESCRIPTION	QTY.
1	515-7670-00	24-EXPLODING SAFE HOUSE FRAME	1
2	830-6079-90	BUTY #90 - SAFEHOUSE, RIGHT	1
3	830-6079-91	BUTY #91 - SAFEHOUSE, LEFT	1
4	830-6079-92	BUTY #92 - SAFEHOUSE FRONT	1
5	249-5003-00	RIVET - 1/8 X 1/4	13

SAFE HOUSE RIVET ASSEMBLY

510-5089-00

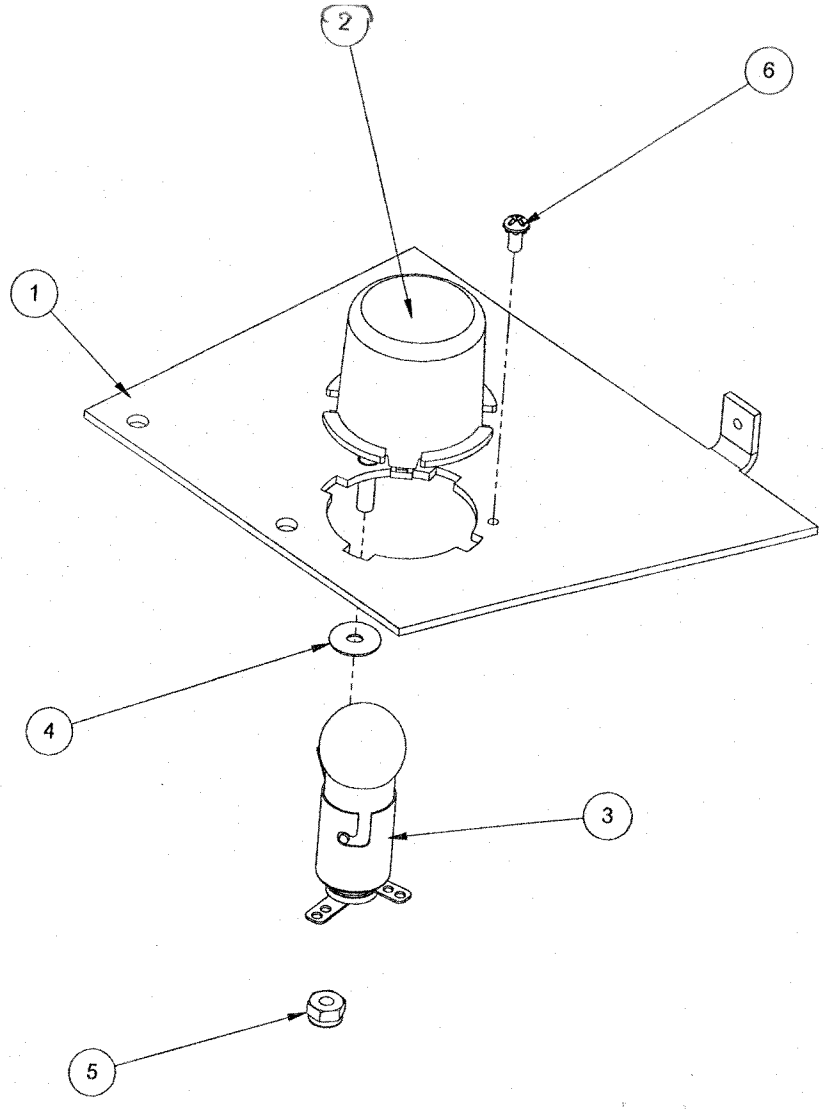

ITEM NO.	PART NUMBER	DESCRIPTION	QTY.
1	515-7676-00	FLASHER MOUNTING PLATE	1
2	550-5030-01	LAMP LENS, TWIST ON, CLEAR	1
3	519-5101-00-HF	SOCKET/#89 BULB ASSY - HEAVY FILAMENT	1
4	545-5348-17	7/16 O.D. RUBBER RING - BLACK	1
5	240-5005-00	6-32 NYLOK STOP NUT	1
6	237-5909-00	SCREW, 4-40 X 1/4" PPH SEMS	1
NOT SHN.	036-5534-17-A7	CABLE - HOUSE FLASHER ASSY	1

24-SAFE HOUSE FLASHER ASSEMBLY

511-5098-00

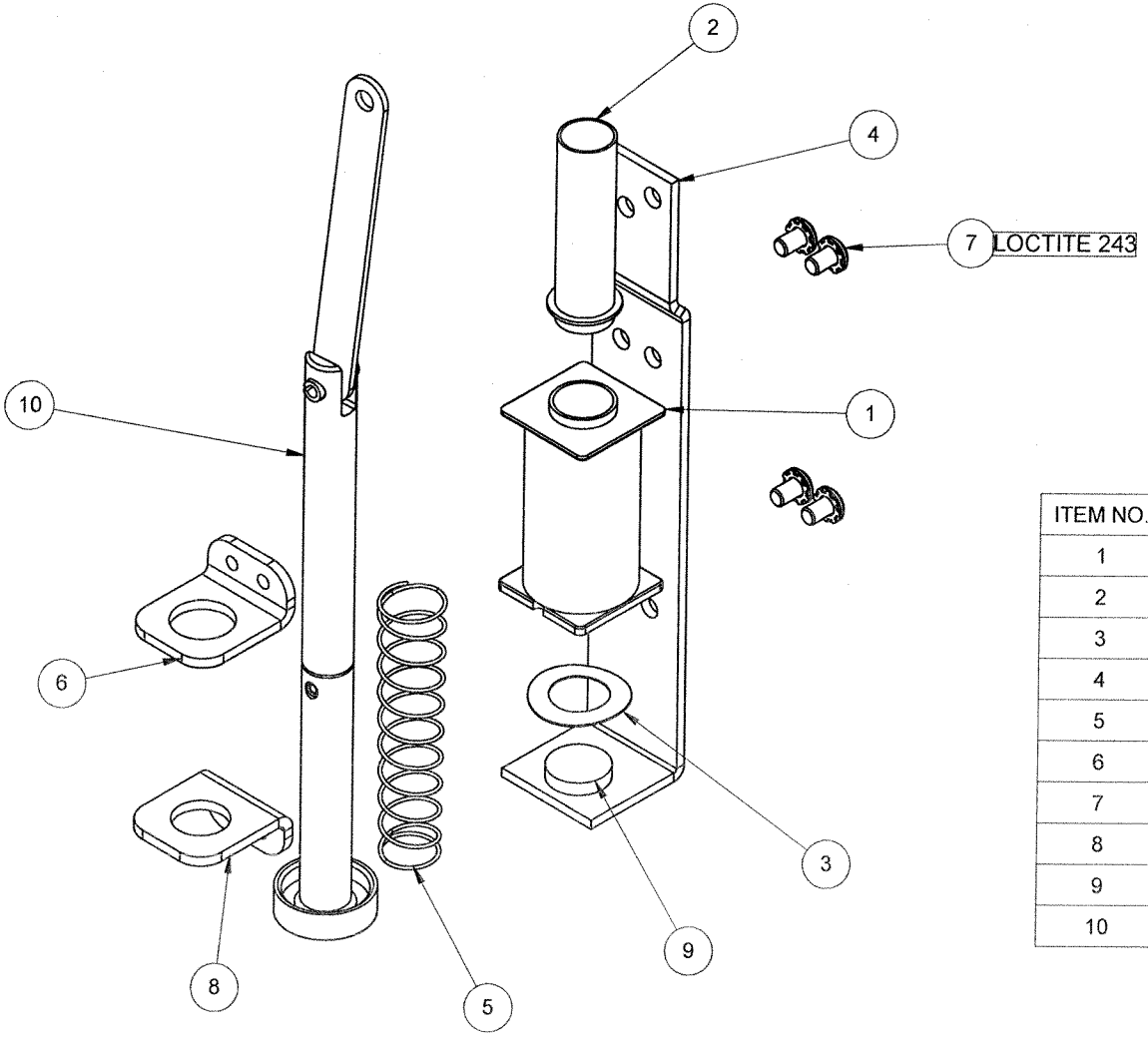

ITEM NO.	PART NUMBER	DESCRIPTION	Default/QTY.
1	511-5206-00	COIL ASSEMBLY	1
2	545-5076-01	COIL SLEEVE	1
3	269-5002-00	SPRING WASHER	1
4	535-0129-00	BRACKET - VUK	1
5	266-5034-01	COMPRESSION SPRING	1
6	535-0130-00	COIL RETAINING BRACKET	1
7	232-5300-00	SCREW, 8-32 X 1/4" PPH SEMS	4
8	535-0130-01	COIL RETAINING BRACKET	1
9	545-5105-00	RUBBER BUMPER	1
10	515-7719-00	PLUNGER/LINK ASSEMBLY - SAFEHOUSE	1

24-SAFE HOUSE VUK ASSEMBLY

511-5099-00

B23

b24

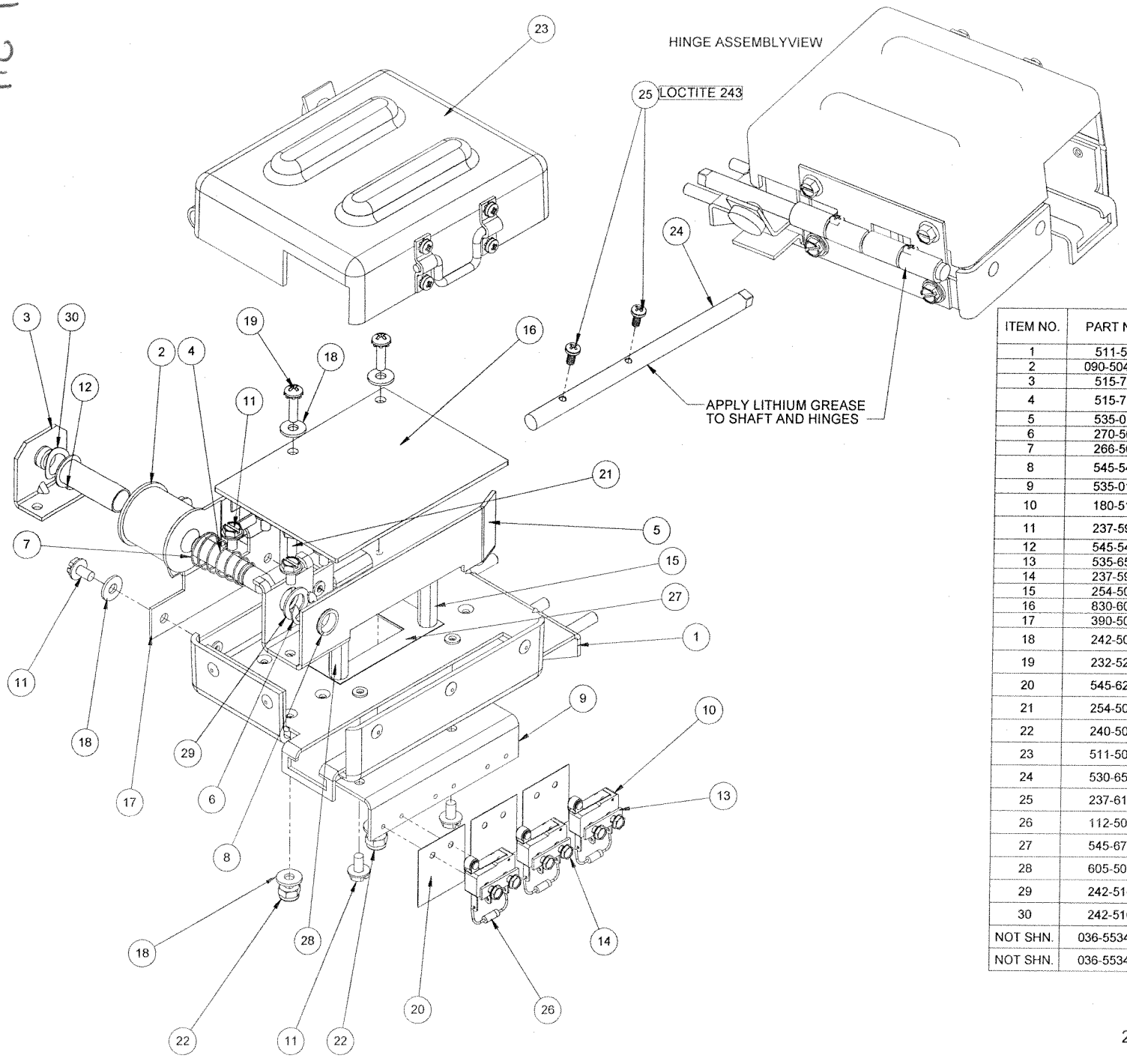

ITEM NO.	PART NUMBER	DESCRIPTION	511-5090-00/ QTY.
1	511-5091-00	SUITCASE FRAME ASSEMBLY	1
2	090-5046-01-ND	MINI-COIL 27-950, NO DIODE	1
3	515-7667-00	PLUNGER STOP BRACKET	1
4	515-7721-00	PLUNGER ASSEMBLY - SUITCASE - 24	1
5	535-0112-00	24 SUITCASE BALL GUIDE	1
6	270-5003-00	RETAINING RING 5/16"	1
7	266-5093-01	MINI EJECT SPRING	1
8	545-5485-00	NYLINER-THOMSON 5/16 (5L1-FF)	1
9	535-0116-00	24 SWITCH BRACKET	1
10	180-5119-02	MICRO-SWITCH - LIGHT ACTUATION	3
11	237-5976-01	SCREW, 6-32 X 1/4 HWH SLT SER SWG	9
12	545-5442-00	MINI - COIL SLEEVE	1
13	535-6539-00	SWITCH BODY PROTECT PLATE	3
14	237-5937-02	SCREW, 2-56 X 1/2" HWH MS	6
15	254-5008-11	HEX SPACER - 1 1/4 "	2
16	830-6079-72	SUITCASE BUTY	1
17	390-5056-00	24 SUITCASE HINGE	1
18	242-5001-00	#6 WASHER	6
19	232-5202-00	SCREW, 6-32 X 1/2" PPH MS SEMS	2
20	545-6268-00	FISCHE PAPER	3
21	254-5024-11	HEX SPACER MALE/FEMALE - 1 1/4"	2
22	240-5005-00	6-32 NYLOK STOP NUT	2
23	511-5089-00	SUITCASE ASSEMBLY	1
24	530-6530-00	24 SUITCASE DRIVE SHAFT	1
25	237-6169-00	#4-40 X 1/4 PPH MS ZINC	2
26	112-5003-00	DIODE - 1N4004	3
27	545-6767-00	FICHE PAPER - SUITCASE	1
28	605-5004-01	SHRINK TUBING - 1/4" X 1" (.1 FT)	.1FT
29	242-5104-00	NYLON WASHER - 5/16 X 1/2 X .031	1
30	242-5103-00	SPRING WASHER - .331 ID X .490 OD X .0075	1
NOT SHN.	036-5534-14-A7	SUITCASE RELEASE CABLE	1
NOT SHN.	036-5534-18-A7	SUITCASE 3-BALL CABLE	1

24 SUITCASE BOTTOM ASSEMBLY

511-5090-00

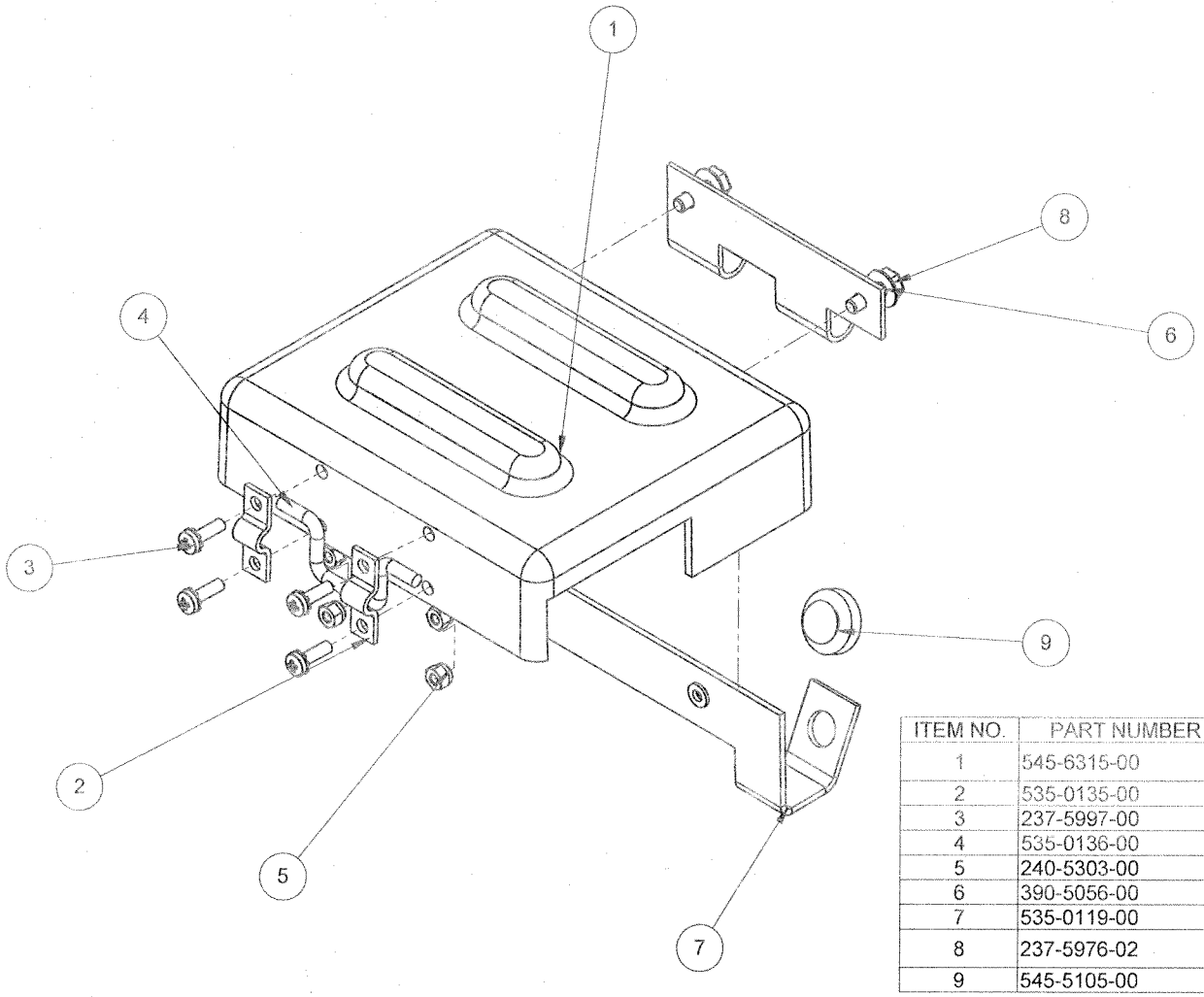

ITEM NO.	PART NUMBER	DESCRIPTION	QTY.
1	545-6315-00	24 PLASTIC SUITCASE COVER	1
2	535-0135-00	HANDLE BRACKET	2
3	237-5997-00	SCREW, 4-40 X 3/8" PPH SEMS	4
4	535-0136-00	HINGE WIRE	1
5	240-5303-00	4-40 NYLON LOCK NUT	4
6	390-5056-00	24 SUITCASE HINGE	1
7	535-0119-00	24 ANTI-ROTATION BRACKET	1
8	237-5976-02	SCREW, 6-32 X 3/8" HWH	2
9	545-5105-00	RUBBER BUMPER	1

SUITCASE ASSEMBLY

511-5089-00

A25

b26

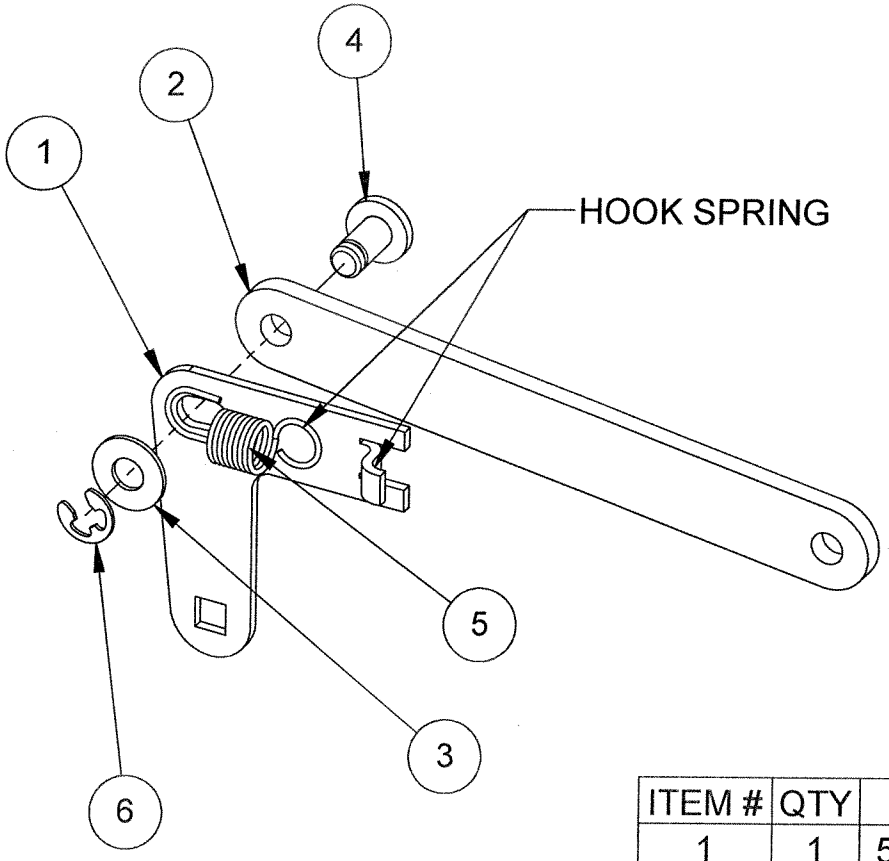

ITEM #	QTY	PART #	DESCRIPTION
1	1	535-0111-00	24 LINKAGE-DRIVEN
2	1	545-6317-04	LINKAGE(PLASTIC) DRIVING
3	1	242-5088-00	NYLON WASHER .195" X .437" X .031"
4	1	530-5720-01	PIVOT PIN
5	1	265-5066-00	SPRING, EXTENSION
6	1	270-5001-00	RETAINING E-RING, 3/16" SHAFT OD

LINKAGE ASSEMBLY

511-5207-00

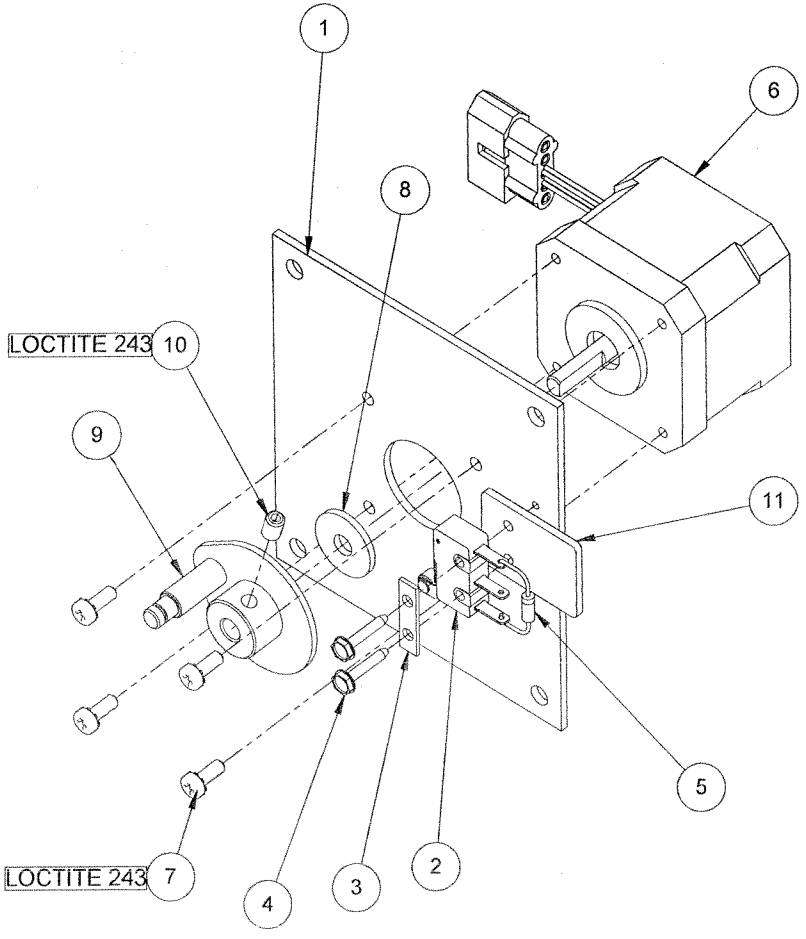

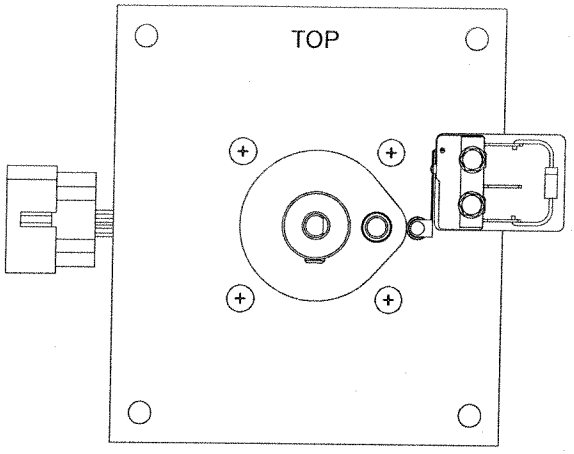

FRONT VIEW
ASSEMBLE AS SHOWN

ITEM #	QTY	PART #	DESCRIPTION
1	1	535-0294-00	MOTOR BRACKET- STEPPER 24V
2	1	180-5119-02	MICRO-SWITCH - LIGHT ACTUATION
3	1	535-6539-00	SWITCH BODY PROTECT PLATE
4	2	237-5937-02	SCREW, 2-56 X 1/2" HWH MS
5	1	112-5003-00	DIODE - 1N4004
6	1	511-5072-00	MOTOR ASSEMBLY, STEPPER
7	4	237-6188-00	SCREW, M3x0.5 X 8MM PPH SEMS ZINC
8	1	242-5038-00	WASHER 13/64 ID X 5/8 OD X 1/16
9	1	515-7669-00	MOTOR CAM WELDMENT
10	1	237-6130-00	8-32 X 1/4 SET SCREW CUP PT
11	1	830-6079-21	BUTY # 21, SWITCH SPACER, 24
NOT SHN.	1	036-5534-11-A7	CABLE - SUITCASE MOTOR ASSEMBLY

SUITCASE STEPPER MOTOR ASSEMBLY

511-5092-00

L27

D28

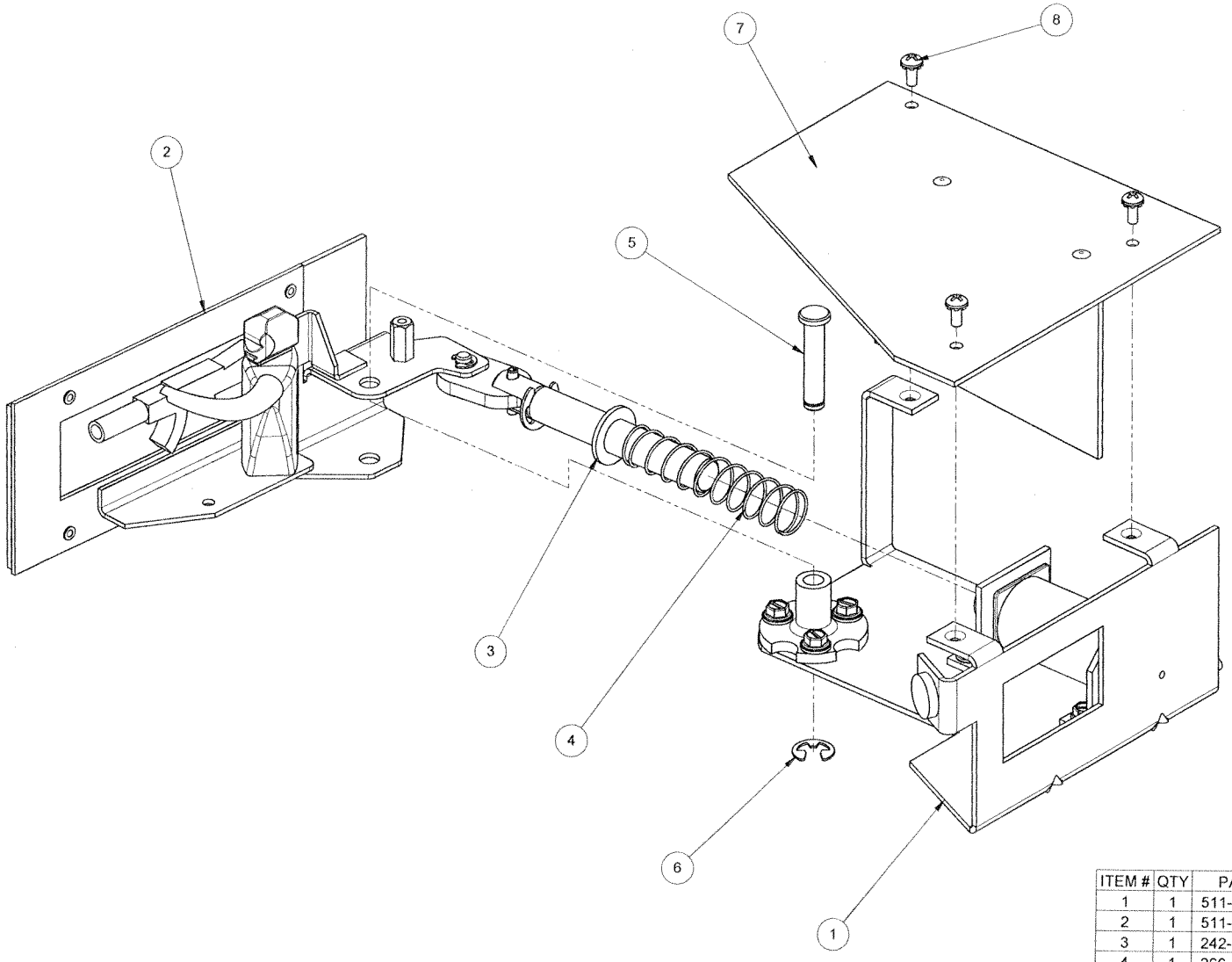

ITEM #	QTY	PART #	DESCRIPTION
1	1	511-5205-00	SNIPER BRACKET ASSEMBLY
2	1	511-5095-01	SNIPER DOOR ASSEMBLY
3	1	242-5081-00	WASHER - NYLON .75 OD x .44 ID
4	1	266-5034-01	COMPRESSION SPRING
5	1	530-6538-01	PIVOT PIN
6	1	270-5002-00	RETAINING RING - 1/4"
7	1	510-5094-23	BUTY ASSEMBLY #23 - SNIPER COVER
8	3	232-5208-00	SCREW, 6-32 X 5/16" PPH SEMS

SNIPER ASSEMBLY

500-7114-00

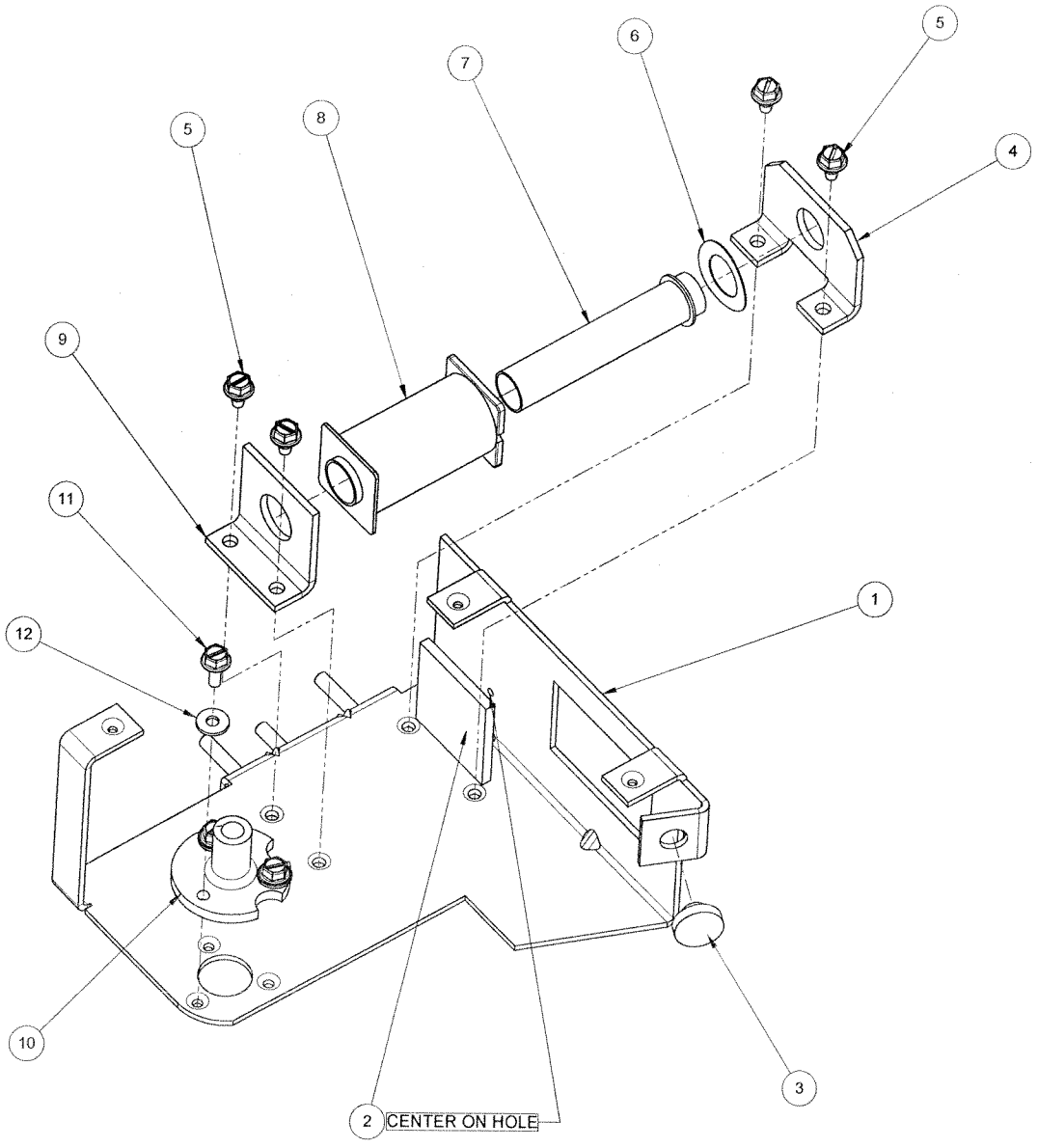

ITEM #	QTY	PART #	DESCRIPTION
1	1	515-7672-00	24-SNIPER BRACKET
2	1	626-5090-00	RUBBER BUMPER - BLUE
3	1	545-5105-00	RUBBER BUMPER
4	1	535-9777-01	COIL BRACKET-DT-OD
5	4	237-5975-04	SCREW, 8-32 X 1/4 HWH SWAGE SERR
6	1	269-5002-00	SPRING WASHER
7	1	545-5847-01	COIL SLEEVE
8	1	511-5206-00	COIL ASSEMBLY
9	1	535-0127-00	COIL BRKT
10	1	545-6322-00	BUSHING
11	3	237-5976-02	SCREW, 6-32 X 3/8" HWH
12	3	242-5001-00	#6 WASHER

SNIPER BRACKET ASSEMBLY

511-5205-00

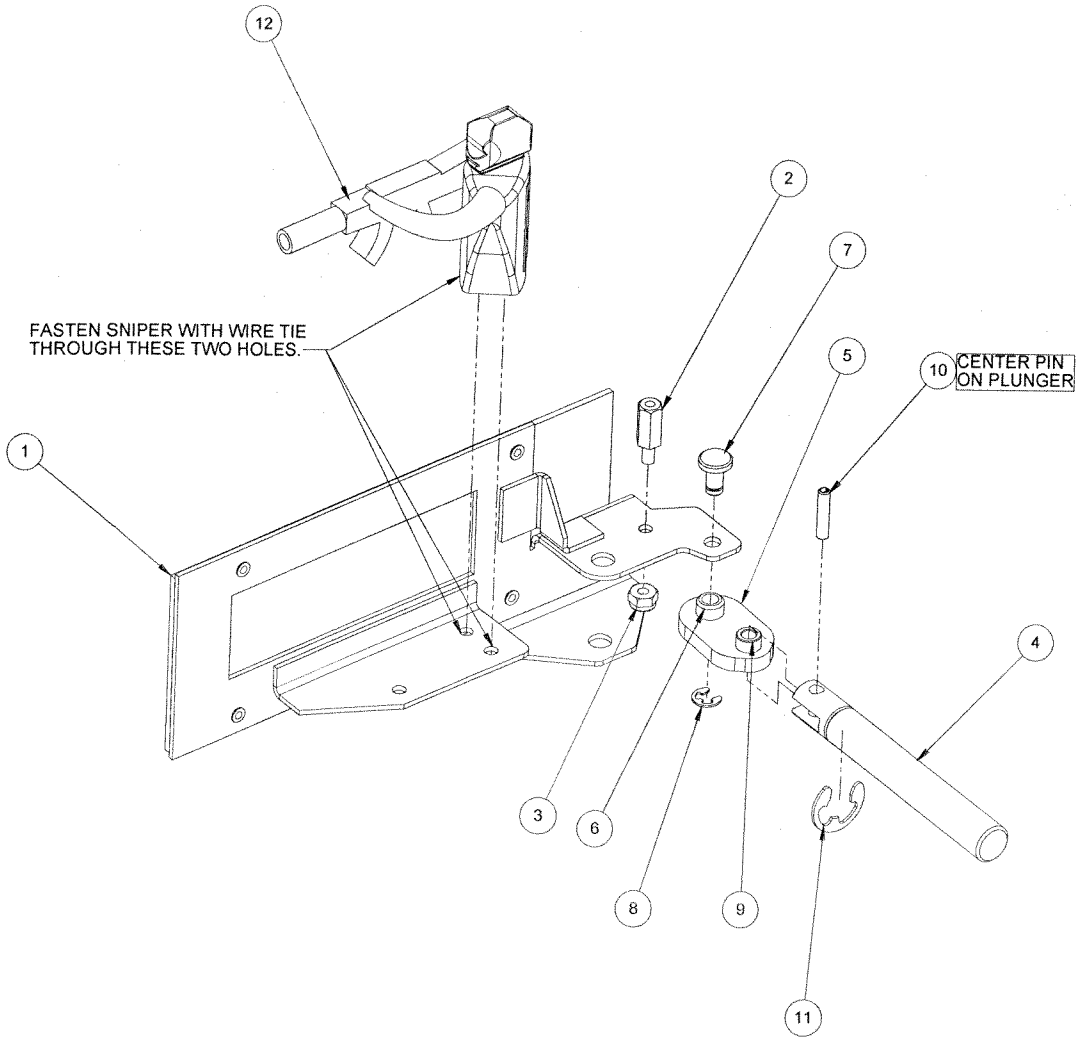

ITEM #	QTY	PART #	DESCRIPTION
1	1	510-5093-00	SNIPER DOOR RIVET ASSEMBLY
2	1	254-5049-03	HEX SPACER M/F 1/4" STUD - 1/2 "
3	1	240-5005-00	6-32 NYLOK STOP NUT
4	1	530-6532-00	PLUNGER SHAFT
5	1	545-5611-01	PLUNGER FLIPPER LINK
6	1	530-5139-00	BUSHING (CRANK BAR)
7	1	530-5720-01	PIVOT PIN
8	1	270-5001-00	RETAINING E-RING, 3/16" SHAFT OD
9	1	530-5532-00	BUSHING (CRANK BAR)
10	1	251-5008-00	ROLL PIN, 1/8 X 5/8
11	1	270-5005-00	RETAINING E-RING, 7/16" SHAFT OD
12	1	545-6319-00	SNIPER - 24
NOT SHN	1	040-5001-02	WIRE TIE - 5-1/2"

SNIPER DOOR ASSEMBLY

511-5095-01

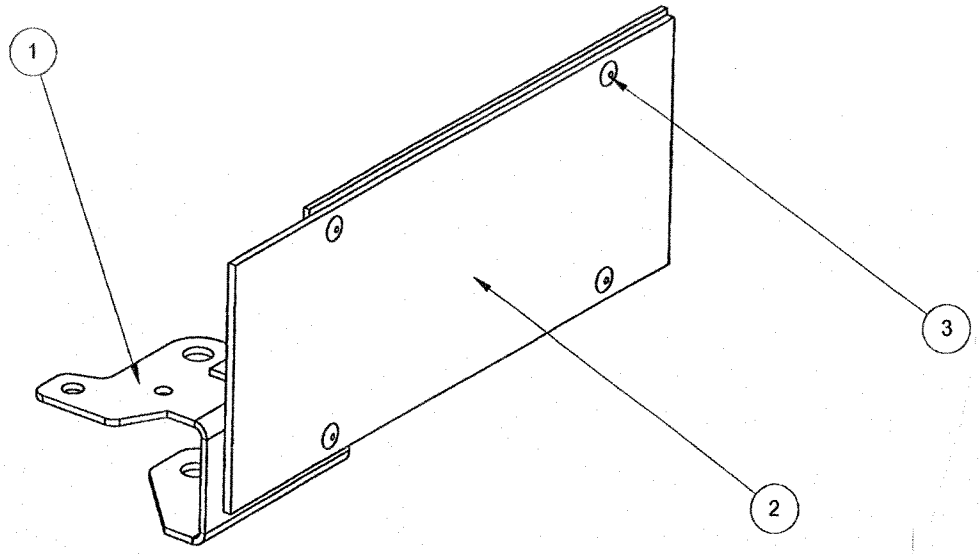

ITEM #	QTY	PART #	DESCRIPTION
1	1	515-7711-00	24-DOOR BRACKET
2	1	830-6079-81	BUTY #81 - SNIPER DOOR
3	4	249-5001-00	RIVET - 1/8 X 3/16

SNIPER DOOR RIVET ASSEMBLY

510-5093-00

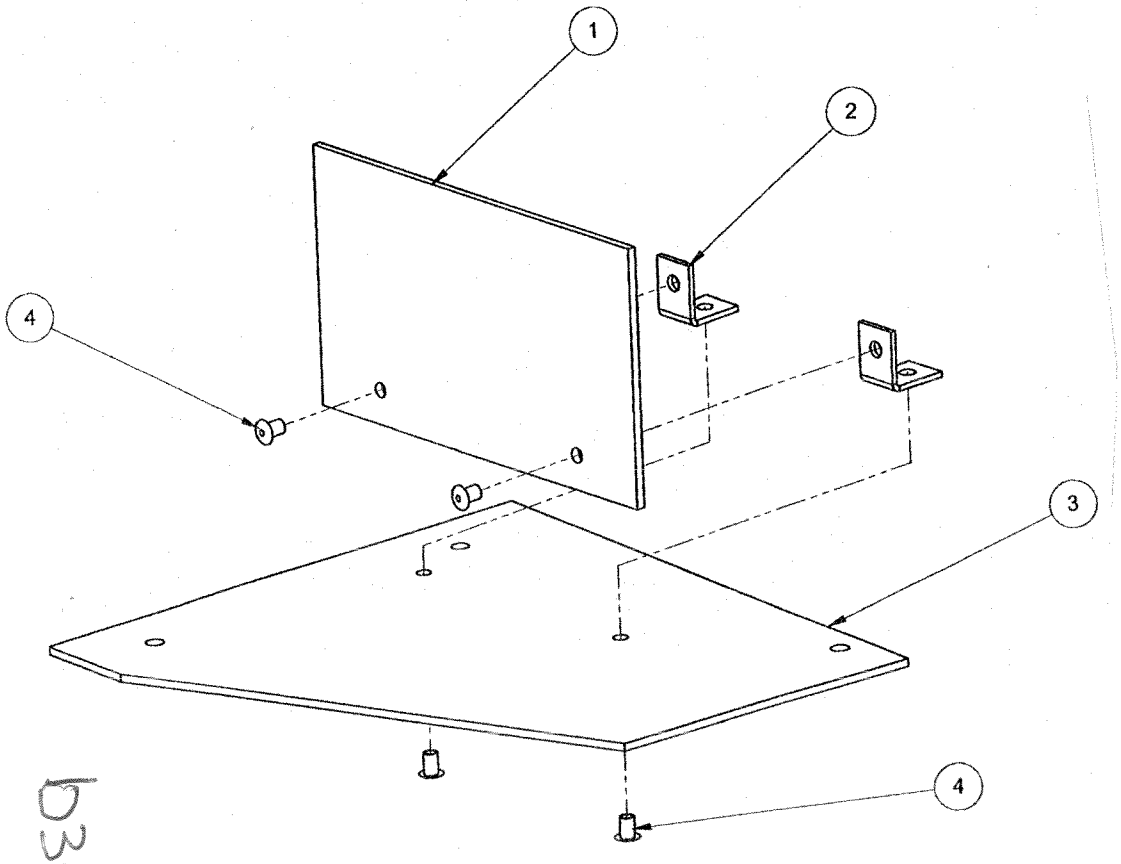

ITEM #	QTY	PART #	DESCRIPTION
1	1	830-6079-23	BUTY #23 - SNIPER
2	2	535-8941-04	BRACKET - PLASTIC MTG
3	1	830-6079-80	BUTY #80 - SNIPER ROOF
4	4	249-5001-00	RIVET - 1/8 X 3/16

BUTY ASSEMBLY #23 - SNIPER COVER

510-5094-23

ITEM #	QTY.	PART NUMBER	DESCRIPTION
1	1	510-5058-00	RIVETED ASSY, LEFT RAMP - 24
2	1	545-5428-00	RUBBER BUMPER
3	10	240-5005-00	6-32 NYLOK STOP NUT
4	6	232-5202-00	SCREW, 6-32 X 1/2" PPH MS SEMS
5	1	515-6490-04-A7	GATE ASSEMBLY W/ CABLE, 24
6	1	535-0291-00	RAMP PROTECTOR-LEFT 24
7	1	535-0292-00	RAMP PROTECTOR-RIGHT 24
8	3	237-5809-00	SCREW, #6 X 1/2" PTH A
9	1	830-6079-30	BUTY #30, LEFT RAMP COVER, FRONT - 24
10	4	254-5000-09	SPACER - 1/4" GRAY
11	1	550-5031-02	MINI MARS W/ EARS - RED SB
12	1	519-5101-00-HF	SOCKET/#89 BULB ASSY - HEAVY FILAMENT
13	1	830-6079-22	BUTY #22, LEFT RAMP COVER, REAR - 24
14	4	232-5204-00	SCREW, 6-32 X 3/4" PPH SEMS
15	4	242-5001-00	#6 WASHER
16	1	511-5094-89	ASSEMBLY, BUTY #89, HELI - 24
17	1	550-5052-01	MINI POST - CLEAR

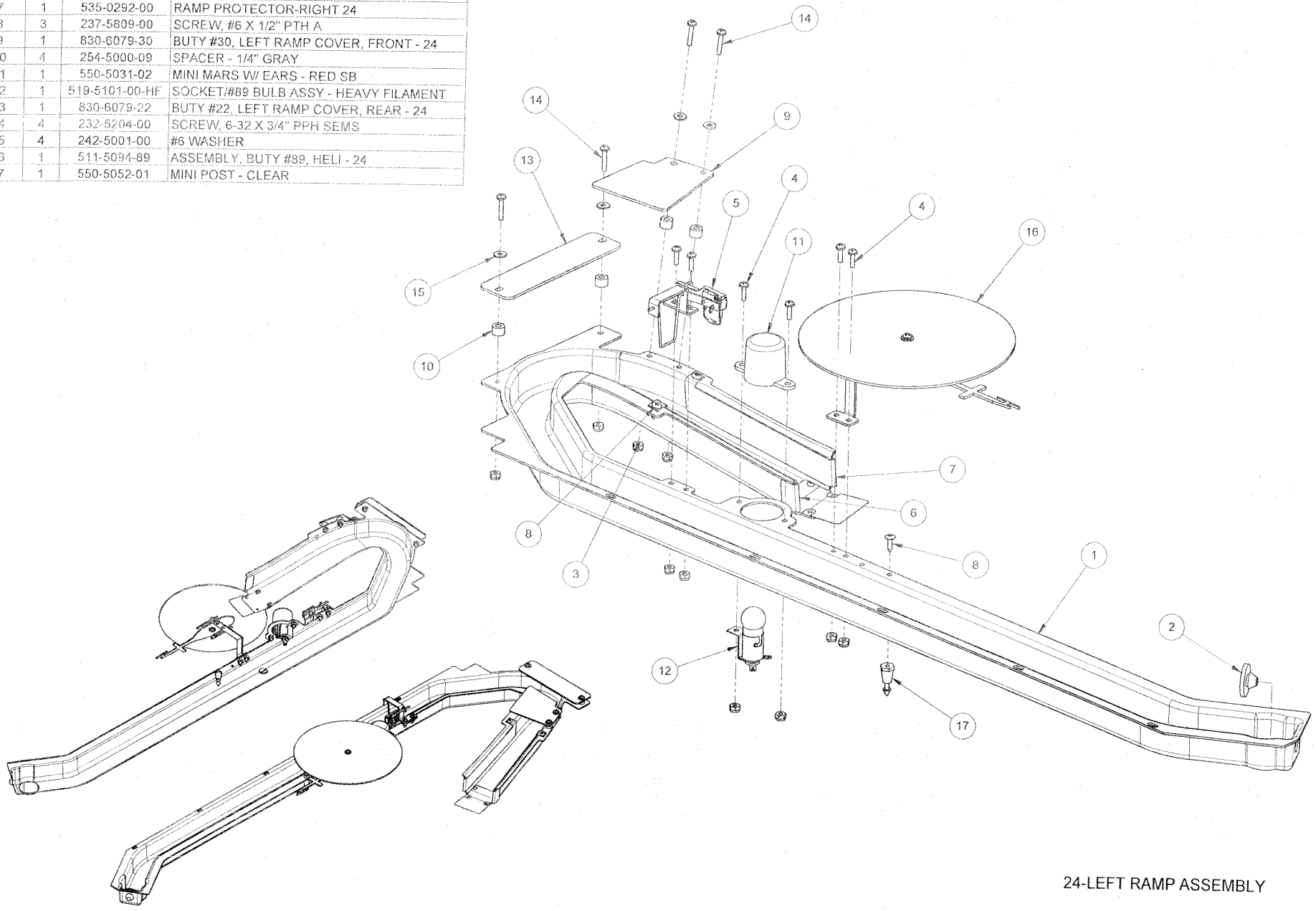

24-LEFT RAMP ASSEMBLY

500-7100-00

ITEM NO.	PART NUMBER	DESCRIPTION	QTY.
1	545-6308-00	24 VACUUM FORM RAMP, LEFT	1
2	535-0096-00	24 RAMP FLAP, LEFT	1
3	249-5003-00	RIVET - 1/8 X 1/4	2
4	246-5000-00	#6 LOCK WASHER, EXT TOOTH	2

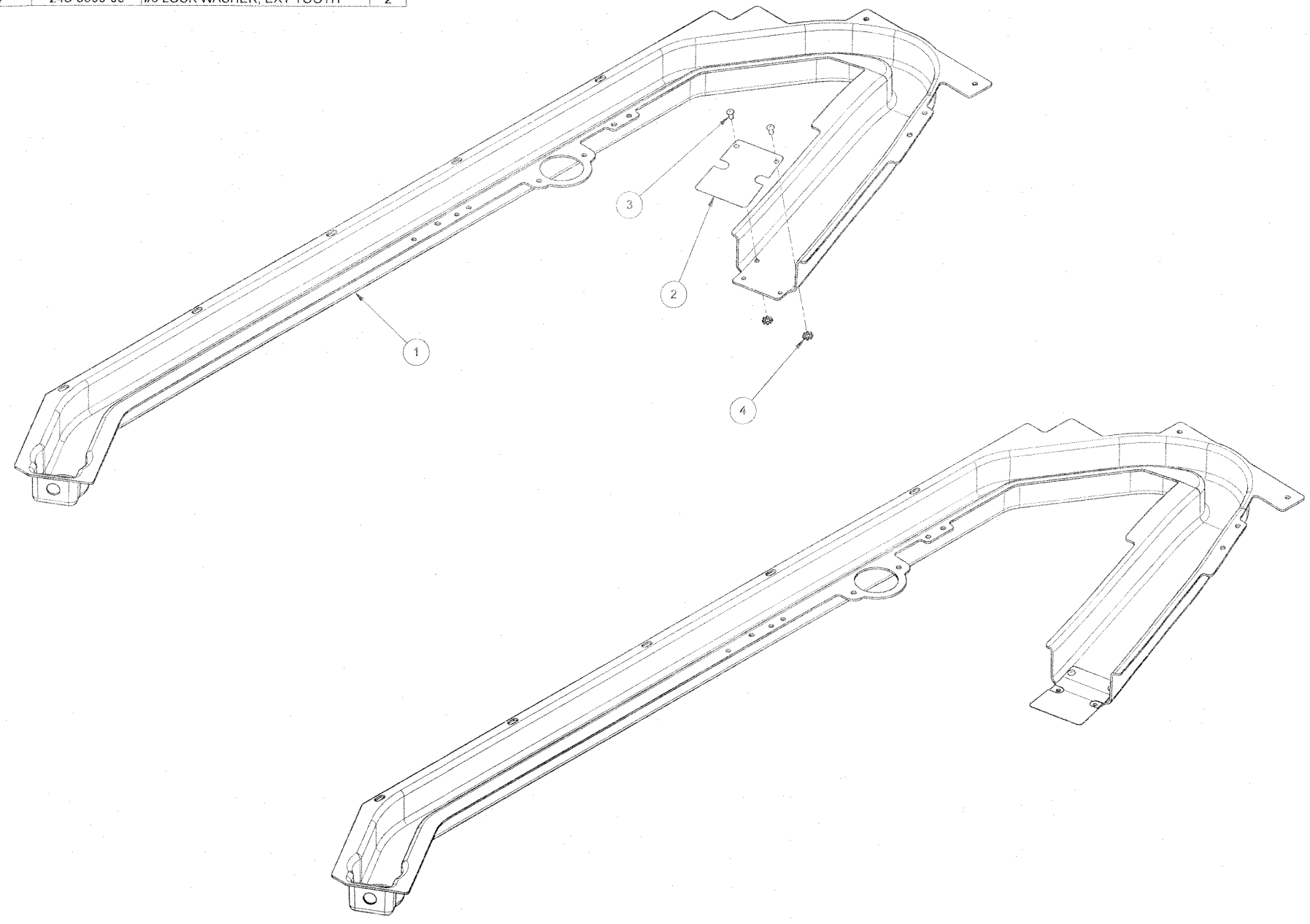

RIVETED ASSY, LEFT RAMP - 24

510-5058-00

b34

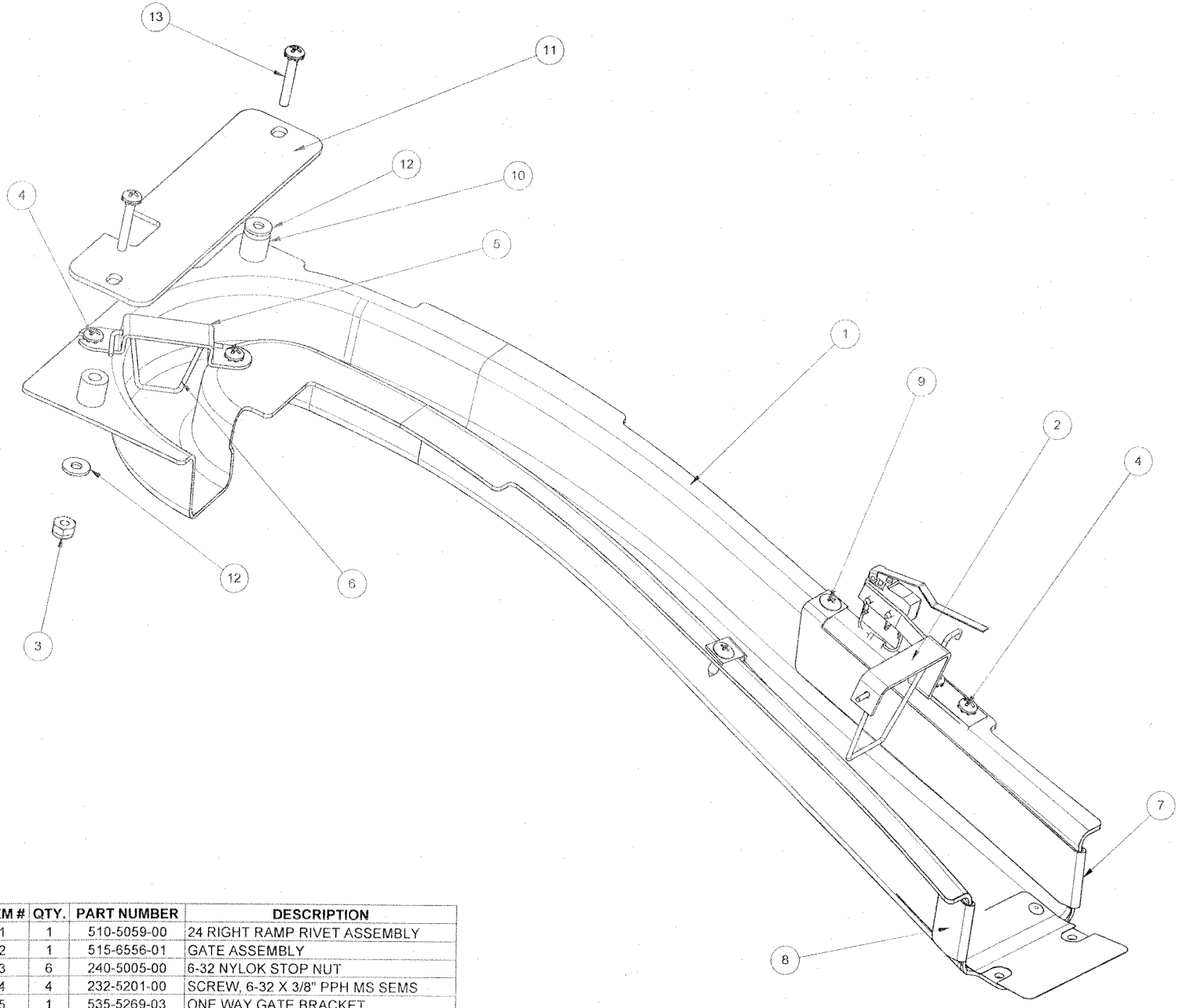

ITEM #	QTY.	PART NUMBER	DESCRIPTION
1	1	510-5059-00	24 RIGHT RAMP RIVET ASSEMBLY
2	1	515-6556-01	GATE ASSEMBLY
3	6	240-5005-00	6-32 NYLOK STOP NUT
4	4	232-5201-00	SCREW, 6-32 X 3/8" PPH MS SEMS
5	1	535-5269-03	ONE WAY GATE BRACKET
6	1	535-0298-00	WIRE GATE - BALL LOCK
7	1	535-0292-00	RAMP PROTECTOR-RIGHT 24
8	1	535-0291-00	RAMP PROTECTOR-LEFT 24
9	2	237-5809-00	SCREW, #6 X 1/2" PTH A
10	2	254-5000-12	SPACER - 3/8" GRAY
11	1	830-6079-31	BUTY #31, RIGHT RAMP COVER - 24
12	2	242-5001-00	#6 WASHER
13	2	232-5205-00	SCREW, 6-32 X 7/8" PPH SEMS

24 RIGHT RAMP ASSEMBLY

500-7101-00

ITEM NO.	PART NUMBER	DESCRIPTION	QTY.
1	545-6309-00	24 RIGHT RAMP	1
2	535-0097-00	24 RAMP FLAP, RIGHT	1
3	249-5001-00	RIVET - 1/8 X 3/16	2
4	246-5000-00	#6 LOCK WASHER, EXT TOOTH	2

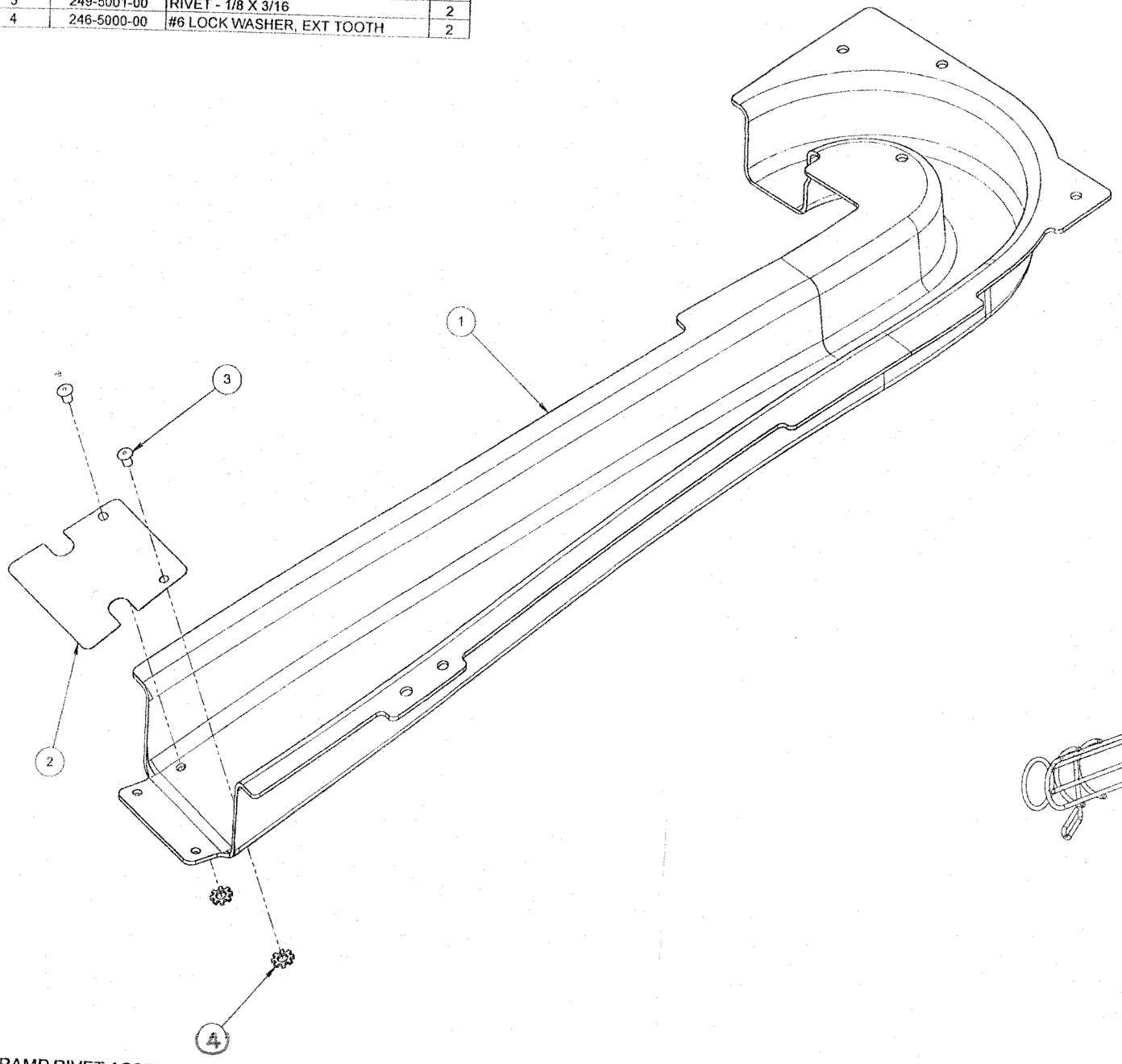

24 RIGHT RAMP RIVET ASSEMBLY

510-5059-00

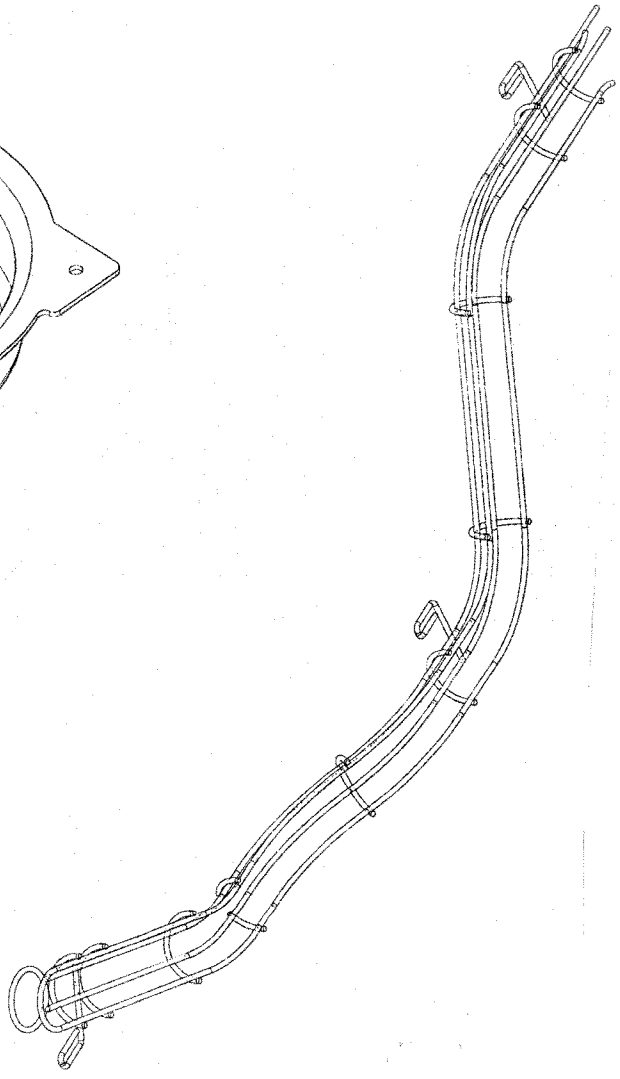

24 WIRE RAMP-RIGHT

515-7663-00

D35

ITEM #	QTY.	PART NUMBER	DESCRIPTION
1	1	525-5880-00	24 BACK PANEL
2	8	240-5101-00	8-32 T-NUT
3	7	519-5000-00-HF	SOCKET & BULB ASSY, CLEAR
4	2	240-5002-00	6-32 T-NUT
5	1	519-5101-00-HFA	SOCKET / #89 BULB / GRMT ASSY
6	3	040-5000-06	1/2" CABLE CLAMP
7	3	234-5001-02	SCREW, #6 X 1/2" HWH
NOT SHN	1	036-5534-04-A7	CABLE, BACK PANEL, 24
NOT SHN	2 FT.	600-5003-00	BRAIDED WIRE - 20 GA.
NOT SHN	13	631-5000-00	STAPLE - 5/16

b36

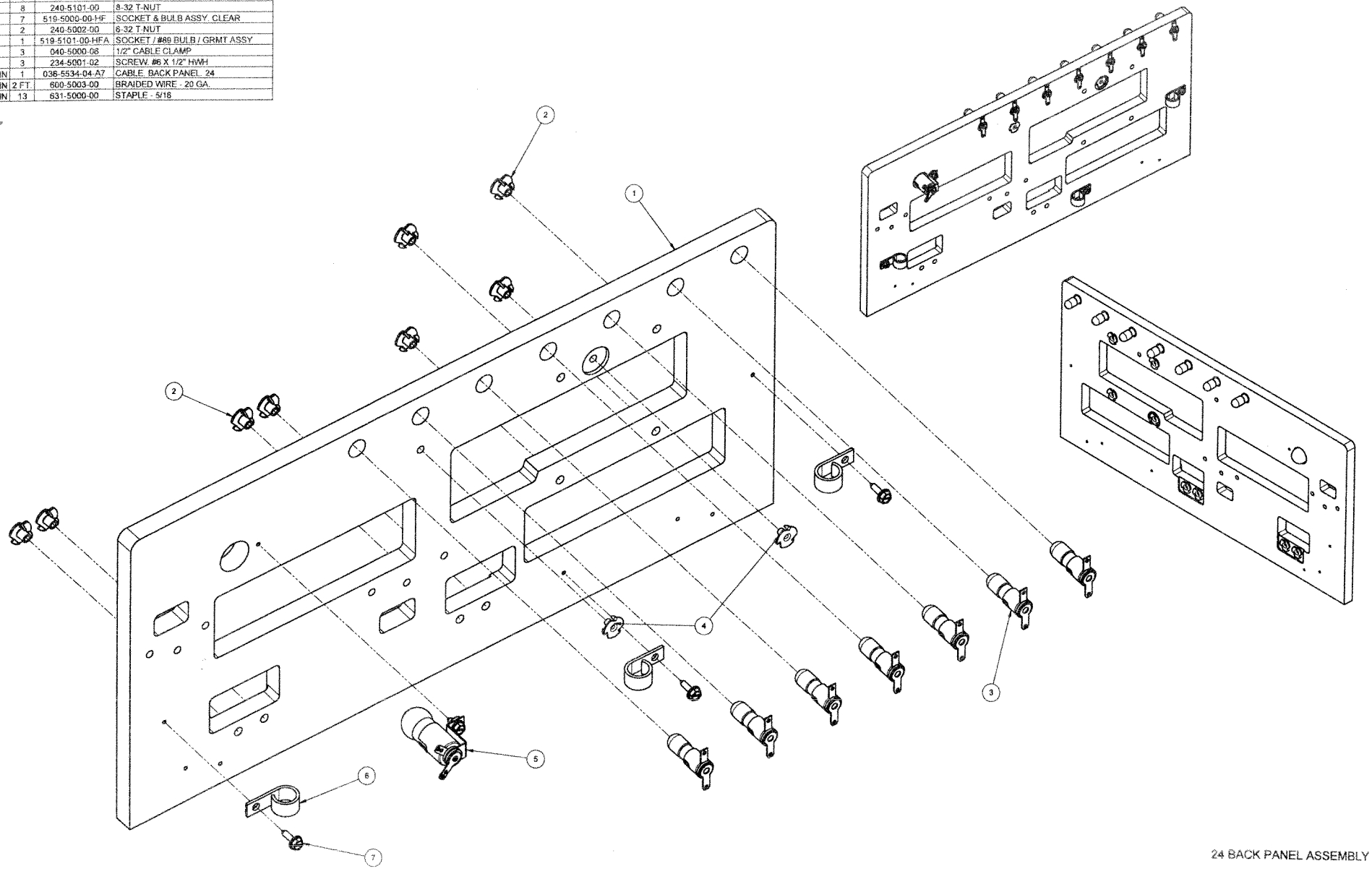

24 BACK PANEL ASSEMBLY

500-7112-00

APPENDIX A

Pinball Game Firmware (White Star Board System* Only) Table

See website for the latest International Code or Updated USA version / checksums

ROM	Chip Size	Program Part Nº	USA Ver. & Check Sum	Bd. Loc.	Raw Part Nº

Apollo 13 (Note 1)

Game ROM	(1M)	965-0208-00	**A5.01 | $09FF**	**U210**	960-5009-00
Sound	(512K)	965-0212-00	1.00 | $5244	U7	960-7001-02
Display	(4M)	965-0213-00	**A5.00 | $B92B**	**ROM 0**	960-5015-01
Voice 1	(4M)	965-0209-00	1.00 | $7FC7	U17	n/a (masked)
Voice 2	(4M)	965-0210-00	1.00 | $8E55	U21	n/a (masked)
Voice 3	(4M)	965-0211-00	1.00 | $08EE	U36	n/a (masked)

Golden Eye (Note 1)

Game ROM	(1M)	965-0214-42	**A4.04 | $3FFF**	**U210**	960-5009-00
Sound	(512K)	965-0217-42	1.00 | $D615	U7	960-7001-02
Display	(4M)	965-0218-42	**A4.00 | $E6ED**	**ROM 0**	960-5015-01
Voice 1	(4M)	965-0215-42	1.00 | $3E32	U17	n/a (masked)
Voice 2	(4M)	965-0216-42	1.00 | $71F0	U21	n/a (masked)

Twister (Note 2)

Game ROM	(1M)	965-0219-41	**A4.05 | $E9FF**	**U210**	960-5009-00
Sound	(512K)	965-0221-41	1.00 | $1FFF	U7	960-7001-02
Display	(4M)	965-0222-41	**A4.00 | $FD01**	**ROM 0**	960-5015-01
Voice 1	(4M)	965-0220-41	1.00 | $3650	U17	960-5015-01
Voice 2	(4M)	965-0223-41	1.00 | $9300	U21	960-5015-01

ID4: Independence Day (Note 2)

Game ROM	(1M)	965-0224-45	**A2.02 | $9CFF**	**U210**	960-5009-00
Sound	(512K)	965-0227-45	1.00 | $222B	U7	960-7001-02
Display	(4M)	965-0228-45	**A2.00 | $ABF7**	**ROM 0**	960-5015-01
Voice 1	(4M)	965-0225-45	1.00 | $3AE1	U17	960-5015-01
Voice 2	(4M)	965-0226-45	1.00 | $206E	U21	960-5015-01

Space Jam (Note 2)

Game ROM	(1M)	965-0229-43	**A3.00 | $E6FF**	**U210**	960-5009-00
Sound	(512K)	965-0233-43	1.00 | $F1E7	U7	960-7001-02
Display	(4M)	965-0234-43	**A3.00 | $0057**	**ROM 0**	960-5015-01
Voice 1	(4M)	965-0230-43	1.00 | $DBA8	U17	960-5015-01
Voice 2	(4M)	965-0231-43	1.00 | $DDF1	U21	960-5015-01
Voice 3	(4M)	965-0232-43	1.00 | $F32A	U36	960-5015-01

The Star Wars Trilogy - Special Edition (S.E.) (Note 2)

Game ROM	(1M)	965-0235-56	**A4.03 | $5EFF**	**U210**	960-5009-00
Sound	(512K)	965-0238-56	1.00 | $4A7D	U7	960-7001-02
Display	(4M)	965-0239-56	**A4.00 | $8817**	**ROM 0**	960-5015-01
Voice 1	(4M)	965-0236-56	1.00 | $E66B	U17	960-5015-01
Voice 2	(4M)	965-0237-56	1.00 | $8F54	U21	960-5015-01

The Lost World: Jurassic Park (Note 2)

Game ROM	(1M)	965-0240-53	**A2.02 | $C8FF**	**U210**	960-5009-00
Sound	(512K)	965-0243-53	1.00 | $A35B	U7	960-7001-02
Display	(4M)	965-0244-53	**A2.01 | $7F46**	**ROM 0**	960-5015-01
Voice 1	(4M)	965-0241-53	1.00 | $1D27	U17	960-5015-01
Voice 2	(4M)	965-0242-53	1.00 | $8DA4	U21	960-5015-01

The X-Files (Note 2)

Game ROM	(1M)	965-0245-46	**A3.03 | $A2FF**	**U210**	960-5009-00
Sound	(512K)	965-0248-46	1.00 | $6648	U7	960-7001-02
Display	(4M)	965-0249-46	**A3.00 | $66D0**	**ROM 0**	960-5015-01
Voice 1	(4M)	965-0246-46	1.00 | $349D	U17	960-5015-01
Voice 2	(4M)	965-0247-46	1.00 | $629C	U21	960-5015-01

Starship Troopers (Note 3)

Game ROM	(1M)	965-0250-59	**A2.00 | $85FF**	**U210**	960-5009-00
Sound	(512K)	965-0253-59	1.00 | $64B2	U7	960-7001-02
Display	(4M)	965-0254-59	**A2.00 | $E77B**	**ROM 0**	960-5015-01
Voice 1	(4M)	965-0251-59	1.00 | $152A	U17	960-5015-01
Voice 2	(4M)	965-0252-59	1.00 | $0291	U21	960-5015-01
Voice 3	(4M)	965-0255-59	1.00 | $95A7	U36	960-5015-01

Viper Night Drivin' (Note 4)

Game ROM	(1M)	965-0266-35	**A2.01 | $C5FF**	**U210**	960-5009-00
Sound	(512K)	965-0271-35	1.00 | $4DF8	U7	960-7001-02
Display	(4M)	965-0272-35	**A2.01 | $C17D**	**ROM 0**	960-5015-01
Voice 1	(4M)	965-0267-35	1.00 | $8018	U17	960-5015-01
Voice 2	(4M)	965-0268-35	1.00 | $2157	U21	960-5015-01
Voice 3	(4M)	965-0269-35	1.00 | $B5A6	U36	960-5015-01
Voice 4	(4M)	965-0270-35	1.00 | $D01E	U37	960-5015-01

Lost In Space (Note 4)

Game ROM	(1M)	965-0282-60	**A1.01 | $B2FF**	**U210**	960-5009-00
Sound	(512K)	965-0287-60	1.00 | $A6AF	U7	960-7001-02
Display	(4M)	965-0288-60	**A1.02 | $32AB**	**ROM 0**	960-5015-01
Voice 1	(4M)	965-0283-60	1.00 | $4391	U17	960-5015-01
Voice 2	(4M)	965-0284-60	1.00 | $8215	U21	960-5015-01
Voice 3	(4M)	965-0285-60	1.00 | $5B32	U36	960-5015-01
Voice 4	(4M)	965-0286-60	1.00 | $8971	U37	960-5015-01

Godzilla (Note 4)

Game ROM	(1M)	965-0289-40	**A2.05| $B1FF**	**U210**	960-5009-00
Sound	(512K)	965-0294-40	1.00 | $0CC8	U7	960-7001-02
Display	(4M)	965-0295-40	**A2.00 | $C929**	**ROM 0**	960-5015-01
Voice 1	(4M)	965-0290-40	1.00 | $0D75	U17	960-5015-01
Voice 2	(4M)	965-0291-40	1.00 | $CCCF	U21	960-5015-01
Voice 3	(4M)	965-0292-40	1.00 | $227F	U36	960-5015-01
Voice 4	(4M)	965-0293-40	1.00 | $DB69	U37	960-5015-01

South Park (Notes 4, 5)

Game ROM	(1M)	965-0301-71	**A1.03 | $58FF**	**U210**	960-5009-00
Sound	(512K)	965-0306-71	1.00 | $1286	U7	960-7001-02
Display	(4M)	965-0307-71	**A1.01 | $166F**	**ROM 0**	960-5015-01
Voice 1	(8M)	965-0302-71	1.00 | $7BF8	U17	960-5016-00
Voice 2	(8M)	965-0303-71	1.00 | $9CCC	U21	960-5016-00
Voice 3	(8M)	965-0304-71	1.00 | $ADD9	U36	960-5016-00
Voice 4	(8M)	965-0305-71	1.00 | $6659	U37	960-5016-00

Harley-Davidson® (Notes 4, 5, 6) *Original (1999-2001)*

Game ROM	(1M)	965-0319-67	**A1.03 | $3EFF**	**U210**	960-5009-00
Sound	(512K)	965-0320-67	1.00 | $F4FF	U7	960-7001-02
Display	(4M)	965-0321-67	**A1.04 | $FC7C**	**ROM 0**	960-5015-01
Voice 1	(8M)	965-0322-67	1.00 | $CD26	U17	960-5016-00
Voice 2	(8M)	965-0323-67	1.00 | $9396	U21	960-5016-00
Voice 3	(8M)	965-0324-67	1.00 | $FB72	U36	960-5016-00
Voice 4	(4M)	965-0325-67	1.00 | $6100	U37	960-5015-01

Sound & Voice 1-4 identical to above H-D® Original.

▶ Harley-Davidson® (Notes 4, 5, 6, 8) *2nd Edition (2002-2003)*

Game ROM	(1M)	965-0319-67**A**	**A1.08 | $23FF**	**U210**	960-5009-00
Display	(4M)	965-0321-67**A**	**A1.05 | $B594**	**ROM 0**	960-5015-01

▶ Harley-Davidson® (Notes 4, 5, 6, 8) *3rd Edition (2004)*

Game ROM	(1M)	965-0319-87	**A4.00 | $1CFF**	**U210**	960-5009-00
Display	(4M)	965-0321-87	**A4.00 | $F4FF**	**U5**	960-5015-01

Striker Xtreme (Notes 4, 5)

Game ROM	(1M)	965-0326-68	**A1.03 | $E4FF**	**U210**	960-5009-00
Sound	(512K)	965-0327-68	1.00 | $3BCA	U7	960-7001-02
Display	(4M)	965-0328-68	**A1.03 | $1957**	**ROM 0**	960-5015-01
Voice 1	(8M)	965-0329-68	1.00 | $482A	U17	960-5016-00
Voice 2	(8M)	965-0330-68	1.00 | $7312	U21	960-5016-00
Voice 3	(8M)	965-0331-68	1.00 | $DE2F	U36	960-5016-00
Voice 4	(8M)	965-0332-68	1.00 | $C508	U37	960-5016-00

NFL (Notes 4, 5) *Not on CD-R or Website: Code through Distributor Only.*

Game ROM	(1M)	965-0339-73	**A1.00 | $D2FF**	**U210**	960-5009-00
Sound	(512K)	965-0340-73	1.00 | $	U7	960-7001-02
Display	(4M)	965-0341-73	**A1.01 | $845A**	**ROM 0**	960-5015-01
Voice 1	(8M)	965-0342-73	1.00 | $	U17	960-5016-00
Voice 2	(8M)	965-0343-73	1.00 | $	U21	960-5016-00
Voice 3	(8M)	965-0344-73	1.00 | $	U36	960-5016-00
Voice 4	(8M)	965-0345-73	1.00 | $	U37	960-5016-00

Sharkey's Shootout (Notes 4, 5)

Game ROM	(1M)	965-0333-72	**A2.11 | $49FF**	**U210**	960-5009-00
Sound	(512K)	965-0334-72	1.01 | $9796	U7	960-7001-02
Display	(4M)	965-0335-72	**A2.01 | $6C33**	**ROM 0**	960-5015-01
Voice 1	(8M)	965-0336-72	1.00 | $58EA	U17	960-5016-00
Voice 2	(8M)	965-0337-72	1.00 | $272B	U21	960-5016-00
Voice 3	(8M)	965-0338-72	1.00 | $41AE	U36	960-5016-00

High Roller Casino (Notes 4, 5)

Game ROM	(1M)	965-0346-65	**A3.00 | $90FF**	**U210**	960-5009-00
Sound	(512K)	965-0347-65	1.00 | $581C	U7	960-7001-02
Display	(4M)	965-0348-65	**A3.00 | $74B3**	**ROM 0**	960-5015-01
Voice 1	(8M)	965-0349-65	1.00 | $E12D	U17	960-5016-00
Voice 2	(8M)	965-0350-65	1.00 | $38F4	U21	960-5016-00
Voice 3	(8M)	965-0351-65	1.00 | $1B54	U36	960-5016-00
Voice 4	(8M)	965-0352-65	1.00 | $D720	U37	960-5016-00

Austin Powers™ (Notes 4, 5)

Game ROM	(1M)	965-0353-74	**A3.02 | $5DFF**	**U210**	960-5009-00
Sound	(512K)	965-0354-74	1.00 | $DA7B	U7	960-7001-02
Display	(4M)	965-0035-74	**A3.00 | $6A34**	**ROM 0**	960-5015-01
Voice 1	(8M)	965-0356-74	1.00 | $D2B9	U17	960-5016-00
Voice 2	(8M)	965-0357-74	1.00 | $9E75	U21	960-5016-00
Voice 3	(8M)	965-0358-74	1.00 | $51F3	U36	960-5016-00
Voice 4	(8M)	965-0359-74	1.00 | $0AE5	U37	960-5016-00

MONOPOLY® (Notes 4, 5)

Game ROM	(1M)	965-0360-75	**A3.20 | $07FF**	**U210**	960-5009-00
Sound	(512K)	965-0361-75	1.00 | $8C18	U7	960-7001-02
Display	(4M)	965-0362-75	**A3.01 | $A381**	**ROM 0**	960-5015-01
Voice 1	(8M)	965-0363-75	1.00 | $35E6	U17	960-5016-00
Voice 2	(8M)	965-0364-75	1.00 | $B35A	U21	960-5016-00
Voice 3	(8M)	965-0365-75	1.00 | $8A9F	U36	960-5016-00

Playboy (Notes 4, 5, 7)

Game ROM	(1M)	965-0367-76	**A5.00 | $7DFF**	**U210**	960-5009-00
Sound	(512K)	965-0368-76	1.02 | $E7C2	U7	960-7001-02
Display	(4M)	965-0369-76	**A5.00 | $A5FF**	**ROM 0**	960-5015-01
Voice 1	(8M)	965-0370-76	1.00 | $9ABE	U17	960-5016-00
Voice 2	(8M)	965-0371-76	1.00 | $9F34	U21	960-5016-00
Voice 3	(8M)	965-0372-76	1.00 | $374B	U36	960-5016-00
Voice 4	(8M)	965-0373-76	1.00 | $237A	U37	960-5016-00

RollerCoaster Tycoon™ (Notes 4, 5, 7)

Sound	(512K)	965-0374-78	1.00 | $F663	U7	960-7001-02
Game ROM	(1M)	965-0375-78	**A7.02| $E5FF**	**U210**	960-5009-00
Voice 1	(8M)	965-0377-78	1.00 | $3C4A	U17	960-5016-00
Voice 2	(8M)	965-0378-78	1.00 | $057A	U21	960-5016-00
Voice 3	(8M)	965-0379-78	1.00 | $04D7	U36	960-5016-00
Display	(4M)	965-0376-78	**A7.01 | $8DDB**	**U5** Disp. Cntrlr.	

The Simpsons™ Pinball Party (Notes 4, 5, 7)

Sound	(512K)	965-0381-77	1.01 | $A7EE	U7	960-7001-02
Game ROM	(1M)	965-0382-77	**A4.00 | $4FFF**	**U210**	960-5009-00
Voice 1	(8M)	965-0383-77	1.00 | $9719	U17	960-5016-00
Voice 2	(8M)	965-0384-77	1.00 | $16ED	U21	960-5016-00
Voice 3	(8M)	965-0385-77	1.00 | $ADCE	U36	960-5016-00
Voice 4	(8M)	965-0386-77	1.00 | $E7E5	U37	960-5016-00
Display	(4M)	965-0387-77	**A4.00 | $8A03**	**U5** DC PCB	960-5015-01

Terminator® 3: Rise of the Machines™ (Notes 4, 5, 7)

Sound	(512K)	965-0388-79	1.00 | $D2FD	U7	960-7001-02
Game ROM	(1M)	965-0389-79	**A4.00 | $F8FF**	**U210**	960-5009-00
Voice 1	(8M)	965-0390-79	1.00 | $1838	U17	960-5016-00
Voice 2	(8M)	965-0391-79	1.00 | $F0D5	U21	960-5016-00
Voice 3	(8M)	965-0392-79	1.00 | $89DA	U36	960-5016-00
Voice 4	(8M)	965-0393-79	1.00 | $1200	U37	960-5016-00
Display	(4M)	965-0394-79	**A4.00 | $6E49**	**U5** DC PCB	960-5015-01

The Lord of the Rings™ (Notes 7, 8)

Sound	(512K)	965-0401-80	1.01 | $36BC	U7	960-7001-02
Game ROM	(1M)	965-0402-80	**A10.00 | $84FF**	**U210**	960-5009-00
Voice 1	(8M)	965-0403-80	1.00 | $1792	U17	960-5016-00
Voice 2	(8M)	965-0404-80	1.00 | $67F1	U21	960-5016-00
Voice 3	(8M)	965-0405-80	1.00 | $89B6	U36	960-5016-00
Voice 4	(8M)	965-0406-80	1.00 | $EA49	U37	960-5016-00
Display	(4M)	965-0407-80	**A10.00 | $1669**	**U5** DC PCB	960-5015-01

footnotes : 1 — 8 *see the bottom of the next page (**A2**).*

APPENDIX A

Pinball Game Firmware (White Star Board System* & S.A.M. System** Only) Table

See website for the latest International Code or Updated USA version / checksums

ROM	Chip Size	Program Part Nº	USA Ver. & Check Sum	Bd. Loc.	Raw Part Nº
Ripley's Believe It or Not!® (Notes 7, 8)					
Sound	(512K)	965-0408-81	1.00 | $D93D	U7	960-7001-02
Game ROM	(1M)	965-0409-81	**A3.20 | $43FF**	**U210**	960-5009-00
Voice 1	(8M)	965-0410-81	1.00 | $067B	U17	960-5016-00
Voice 2	(8M)	965-0411-81	1.00 | $C8B8	U21	960-5016-00
Voice 3	(8M)	965-0412-81	1.00 | $64C2	U36	960-5016-00
Voice 4	(8M)	965-0413-81	1.00 | $5341	U37	960-5016-00
Display	(4M)	965-0414-81	**A3.00 | $DE4B**	**U5** DC PCB	960-5015-01
Elvis® (Notes 7, 8)					
Sound	(512K)	965-0415-84	1.00 | $8CD2	U7	960-7001-02
Game ROM	(1M)	965-0416-84	**A5.00 | $50FF**	**U210**	960-5009-00
Voice 1	(8M)	965-0417-84	1.00 | $538D	U17	960-5016-00
Voice 2	(8M)	965-0418-84	1.00 | $8BCD	U21	960-5016-00
Voice 3	(8M)	965-0419-84	1.00 | $60F8	U36	960-5016-00
Voice 4	(8M)	965-0420-84	1.00 | $14D8	U37	960-5016-00
Display	(4M)	965-0421-84	**A5.00 | $A1F6**	**U5** DC PCB	960-5015-01
The Sopranos℠ (Notes 7, 8)					
Sound	(512K)	965-0422-85	4.00 | $9B5A	U7	960-7001-02
Game ROM	(1M)	965-0423-85	**A5.00 | $5BFF**	**U210**	960-5009-00
Voice 1	(8M)	965-0424-85	3.00 | $F01E	U17	960-5016-00
Voice 2	(8M)	965-0425-85	1.04 | $C14C	U21	960-5016-00
Voice 3	(8M)	965-0426-85	1.04 | $47A3	U36	960-5016-00
Voice 4	(8M)	965-0427-85	1.04 | $ADCD	U37	960-5016-00
Display	(4M)	965-0428-85	**A5.00 | $B4BB**	**U5** DC PCB	960-5015-01
NASCAR® (Notes 7, 8)					
Sound	(512K)	965-0429-86	2.00 | $32B3	U7	960-7001-02
Game ROM	(1M)	965-0430-86	**A4.50 | $39FF**	**U210**	960-5009-00
Voice 1	(8M)	965-0431-86	2.00 | $CFFB	U17	960-5016-00
Voice 2	(8M)	965-0432-86	2.00 | $22C0	U21	960-5016-00
Voice 3	(8M)	965-0433-86	2.00 | $5FC8	U36	960-5016-00
Voice 4	(8M)	965-0434-86	2.00 | $2902	U37	960-5016-00
Display	(4M)	965-0435-86	**A4.00 | $92BD**	**U5** DC PCB	960-5015-01
Grand Prix (Notes 7, 8)					
Sound	(512K)	965-0429-91	V1.00 | $6F89	U7	960-7001-02
Game ROM	(1M)	965-0430-91	**A4.50 | $5EFF**	**U210**	960-5009-00
Voice 1	(8M)	965-0431-91	1.00 | $CE0E	U17	960-5016-00
Voice 2	(8M)	965-0432-91	1.00 | $F4C6	U21	960-5016-00
Voice 3	(8M)	965-0433-91	1.00 | $057D	U36	960-5016-00
Voice 4	(8M)	965-0434-91	1.00 | $2646	U37	960-5016-00
Display	(4M)	965-0435-91	**A4.00 | $DA8E**	**U5** DC PCB	960-5015-01
[Dale Jr.] (Notes 7, 8) *Call for more info if code update required.*					
Sound	(512K)	965-0436-97		U7	960-7001-02
Game ROM	(1M)	965-0437-97		**U210**	960-5009-00
Voice 1	(8M)	965-0438-97		U17	960-5016-00
Voice 2	(8M)	965-0439-97		U21	960-5016-00
Voice 3	(8M)	965-0440-97		U36	960-5016-00
Voice 4	(8M)	965-0441-97		U37	960-5016-00
Display	(4M)	965-0442-97		**U5** DC PCB	960-5015-01

**** GAMES BELOW THIS LINE / NEXT COLUMN ARE S.A.M. SYSTEM GAMES**

TO ORDER MEMORY STICK WITH GAME FILES FROM YOUR DISTRIBUTOR, USE SPI PART NUMBER 970-0128-00 & INCLUDE THE GAME NAME / LANGUAGE FILE(S) DESIRED.

World Poker Tour™ Pinball (WPT) (Notes 7, 9)

Boot B-02 (8M) **965-BOOT-SAM** **1.04** | $7E62 **U9** *960-5016-00 unprogrammed*

Memory Stick 128MB (970-0128-00)	Version	System	Bin Files:
English + Spanish	14AL	1.38+	WPT1400AL.bin
English Only	14A	1.17+	WPT1400A.bin
English + French	14AF	1.17+	WPT1400AF.bin
French Only	14F	1.17+	WPT1400F.bin
German + French	14GF	1.17+	WPT1400GF.bin
German Only	14G	1.17+	WPT1400G.bin
English + Italian	14AI	1.17+	WPT1400AI.bin
Italian Only	14I	1.17+	WPT1400I.bin

NOTE: THE TYPICAL SIZE PER UNZIPPED BIN FILE IS 25MB – 30MB+/–

The Simpsons™ Kooky Carnival Redemption (Note 9)

Boot B-02 (8M) **965-BOOT-SAM** **1.04** | $7E62 **U9** *960-5016-00 unprogrammed*

Memory Stick 128MB (970-0128-00)	Version	Bin Files:
English Only	1.05	SKC0105.bin
English New Jersey Only	0.09NJ	SKC0090NJ.bin

NOTE: THE TYPICAL SIZE PER UNZIPPED BIN FILE IS 5.5MB +/–

©Disney's Pirates of the Caribbean Pinball (POTC) (Notes 7, 9)

Boot B-02 (8M) **965-BOOT-SAM** **1.06** | $2014 **U9** *960-5016-00 unprogrammed*

Memory Stick 128MB (970-0128-00)	Version	System	Bin Files:
English + Spanish	4.00AS	1.25+	POTC0400AS.bin
English + French	4.00AF	1.25+	POTC0400AF.bin
German + French	4.00GF	1.25+	POTC0400GF.bin
English + Italian	4.00AI	1.25+	POTC0400AI.bin

NOTE: THE TYPICAL SIZE PER UNZIPPED BIN FILE IS 25MB – 30MB+/–

Family Guy™ Pinball (FG) (Notes 7, 9)

Boot B-02 (8M) **965-BOOT-SAM** **2.09** | $10A3 **U9** *960-5016-00 unprogrammed*

Memory Stick 128MB (970-0128-00)	Version	System	Bin Files:
English + Spanish	12.00AL	1.37+	FG1200AL.bin
English + French	12.00AF	1.37+	FG1200AF.bin
English + German	12.00AG	1.37+	FG1200GF.bin
English + Italian	12.00AI	1.37+	FG1200AI.bin

NOTE: THE TYPICAL SIZE PER UNZIPPED BIN FILE IS 25MB – 30MB+/–

Spider-Man™ / Black Spider-Man™ Pinball (S-M) (Notes 7, 9)

Boot B-02 (8M) **965-BOOT-SAM** **2.1** | $F625 **U9** *960-5016-00 unprogrammed*

Memory Stick 128MB (970-0128-00)	Version	System	Bin Files:
English	1.92E	1.37+	spd_1_92_e.bin
English + Spanish	1.92ES	1.37+	spd_1_92_es.bin
English + French	1.92EF	1.37+	spd_1_92_ef.bin
German+French	1.92GF	1.37+	spd_1_92_gf.bin
English + Italian	1.92EI	1.37+	spd_1_92_ei.bin

NOTE: THE TYPICAL SIZE PER UNZIPPED BIN FILE IS 25MB – 30MB+/–

Wheel of Fortune™ Pinball (WoF) (Notes 7, 9)

Boot B-02 (8M) **965-BOOT-SAM** **2.3** | $B83B **U9** *960-5016-00 unprogrammed*

Memory Stick 128MB (970-0128-00)	Version	System	Bin Files:
English	5.0A	1.38+	wof0500a.bin
German	5.0G	1.38+	wof0500g.bin
French	5.0F	1.38+	wof0500f.bin
Italian	5.0I	1.38+	wof0500i.bin
Spanish	5.01S	1.38+	wof0500s.bin

NOTE: THE TYPICAL SIZE PER UNZIPPED BIN FILE IS 25MB – 30MB+/–

Shrek™ Pinball (S) (Notes 7, 9)

Boot B-02 (8M) **965-BOOT-SAM** **2.3** | $B83B **U9** *960-5016-00 unprogrammed*

Memory Stick 128MB (970-0128-00)	Version	System	Bin Files:
English ONLY	1.4A	1.41+	SH0140E.bin

NOTE: THE TYPICAL SIZE PER UNZIPPED BIN FILE IS 25MB – 30MB+/–

Indiana Jones™ Pinball (S) (Notes 7, 9)

PB EPROM PE-2 (8M) 965-BOOT-SAM **3.1** | $4CF6 **U9** *960-5016-00 unprogrammed*

Memory Stick 128MB (970-0128-00)	Version	System	Bin Files:
English	1.13A	1.42+	INDY0113A.bin

NOTE: THE TYPICAL SIZE PER UNZIPPED BIN FILE IS 25MB – 30MB+/–

Batman™ Pinball (S) (Notes 7, 9)

PB EPROM PE-2 (8M) 965-BOOT-SAM **3.1** | $4CF6 **U9** *960-5016-00 unprogrammed*

Memory Stick 128MB (970-0128-00)	Version	System	Bin Files:
English	2.2E	1.45+	BAT_V2-20_E.bin

SEE WEBSITE FOR UPDATES

NOTE: THE TYPICAL SIZE PER UNZIPPED BIN FILE IS 25MB – 30MB+/–

footnotes:

1 ROMs on CPU/Sound Bd.: 520-5136-**00** (Stereo) & Display Cont. Bd.: 520-5055-01
2 ROMs on CPU/Sound Bd.: 520-5136-**10** (Mono) & Display Cont. Bd.: 520-5055-01
3 ROMs on CPU/Sound Board: 520-5136-**15*** (Mono) (*FCC 11-97) & Display Controller Board: 520-5055-**02*** (*FCC 11-97)
4 ROMs on CPU/Sound Bd.: 520-5136-**16**† (Mono) (†FCC 02-98) & Display Controller Board: 520-5055-**03**‡ (‡FCC 02-98)
5 This game uses **8MB** VOICE ROMS at U17, U21, U36 & U37 *(if 3 ROMs use U37 will be unused)* requiring a **Jumper at Loc. W6**. Refer to CPU/Snd. Bd. Schematic (2 of 3).
6 **Harley-Davidson® 2nd Edition:** For Game ROM, Sound & Display info (version, check sums, part numbers) call Tech Support or check our website (see back cover) for current versions or other info. Raw Part numbers are identical to the H-D® original.
7 **ToPS™ (Tournament Pinball System) READY!**
8 ROMs on **CPU/Sound Board II (with ATMEL Processor)**: **520-5300-00** & Display Cont. Bd.: 520-5055-03‡ (‡FCC 02-98)
9 **Boot ROM** (U9) on **CPU/Sound Board (S.A.M. System)** : **520-5246-00**

Game Revisions can be updated after the Production Run. This Table is accurate as of the printing of this manual. If any changes occurred, the next game manual will include the updated information. The version stated is USA. If there is a question of as to the latest Code Revision, Check Sum *or* File Revision, call our Technical Support Dept., 1-800-542-5377 *or* 1-708-345-7700 *(Select Opt. 1).*

Our website **www.SternPinball.com/GAME-code.shtml** has the latest code which an be downloaded *(an EPROM Burner and/or Memory Stick are required).*

APPENDIX A

Pinball Game Firmware Table

EPROM	Chip Size	Program Part №	USA Ver.	Bd. Loc.	Raw Part №
Laser War					
CPU	(256K)	965-0004-00	LWAR.C5	C5	960-5007-00
Sound (Old)	(256K)	965-0005-00		J5	960-5007-00
Sound (Old)	(256K)	965-0006-00		J6	960-5007-00
Sound (Old)	(256K)	965-0007-00		J7	960-5007-00
			- OR -		
Sound	(256K)	965-0008-00		7F	960-5007-00
Sound 1	(512K)	965-0009-00		6F	960-7001-02
Sound 2	(512K)	965-0010-00		4F	960-7001-02
Secret Service					
CPU	(256K)	965-0011-00	A4-6	B5	960-5007-00
CPU	(256K)	965-0012-00	A4-6	C5	960-5007-00
Voice 1	(512K)	965-0014-00		6F	960-7001-02
Voice 2	(512K)	965-0015-00		4F	960-7001-02
Sound	(256K)	965-0013-00		7F	960-5007-00
Torpedo Alley					
CPU	(256K)	965-0016-00	A2-1	B5	960-5007-00
CPU	(256K)	965-0017-00	A2-1	C5	960-5007-00
Voice 1	(512K)	965-0019-00		6F	960-7001-02
Voice 2	(512K)	965-0020-00		4F	960-7001-02
Sound	(256K)	965-0018-00		7F	960-5007-00
Time Machine					
CPU	(128K)	965-0021-00	A2-4	B5	960-5006-00
CPU	(256K)	965-0022-00	A2-4	C5	960-5007-00
Voice 1	(512K)	965-0024-00		6F	960-7001-02
Voice 2	(512K)	965-0025-00		4F	960-7001-02
Sound	(256K)	965-0023-00		7F	960-5007-00
Playboy 35th Anniversary					
CPU	(256K)	965-0046-00	A2-4	B5	960-5007-00
CPU	(256K)	965-0047-00	A2-4	C5	960-5007-00
Voice 1	(512K)	965-0049-00		6F	960-7001-02
Voice 2	(512K)	965-0050-00		4F	960-7001-02
Sound	(256K)	965-0048-00		7F	960-5007-00
ABC Monday Night Football					
CPU	(128K)	965-0031-00	A2-7	B5	960-5006-00
CPU	(256K)	965-0032-00	A2-7	C5	960-5007-00
Voice 1	(512K)	965-0034-00		6F	960-7001-02
Voice 2	(512K)	965-0035-00		4F	960-7001-02
Sound	(256K)	965-0033-00		7F	960-5007-00
Robocop					
CPU	(256K)	965-0036-00	A3-4	B5	960-5007-00
CPU	(256K)	965-0037-00	A3-4	C5	960-5007-00
Voice 1	(512K)	965-0039-00		6F	960-7001-02
Voice 2	(512K)	965-0040-00		4F	960-7001-02
Sound	(256K)	965-0038-00		7F	960-5007-00
Phantom of the Opera					
CPU	(128K)	965-0026-00	A3-2	B5	960-5006-00
CPU	(256K)	965-0027-00	A3-2	C5	960-5007-00
Voice 1	(512K)	965-0029-00		6F	960-7001-02
Voice 2	(512K)	965-0030-00		4F	960-7001-02
Sound	(256K)	965-0028-00		7F	960-5007-00
Back to the Future					
CPU	(256K)	965-0041-00	A2-0	B5	960-5007-00
CPU	(256K)	965-0042-00	A2-0	C5	960-5007-00
Voice 1	(512K)	965-0044-00		6F	960-7001-02
Voice 2	(512K)	965-0045-00		4F	960-7001-02
Sound	(256K)	965-0043-00		7F	960-5007-00
The Simpsons					
CPU	(128K)	965-0051-00	A2-7	B5	960-5006-00
CPU	(256K)	965-0052-00	A2-7	C5	960-5007-00
Voice 1	(512K)	965-0054-00		6F	960-7001-02
Voice 2	(512K)	965-0055-00		4F	960-7001-02
Sound	(256K)	965-0053-00		7F	960-5007-00
Checkpoint					
CPU	(128K)	965-0056-00	A1-7	B5	960-5006-00
CPU	(256K)	965-0134-00	A1-7	C5	960-5007-00
Voice 1	(1M)	965-0057-00		F7	960-5009-00
Voice 2	(1M)	965-0058-00		F5	960-5009-00
Sound	(256K)	965-0059-00		F4	960-5007-00
Display	(512K)	965-0060-00	CP80	U8	960-7001-02
Teenage Mutant Ninja Turtles					
CPU	(128K)	965-0061-00	A1.04	B5	960-5006-00
CPU	(256K)	965-0062-00	A1.04	C5	960-5007-00
Voice 1	(1M)	965-0063-00		F5/6	960-5009-00
Voice 2	(1M)	965-0064-00		F4/5	960-5009-00
Sound	(256K)	965-0065-00		F7	960-5007-00
Display	(512K)	965-0066-00	A1.04	U8	960-7001-02
Batman					
CPU	(128K)	965-0067-00	A1.06	B5	960-5006-00
CPU	(256K)	965-0135-00	A1.06	C5	960-5007-00
Voice 1	(2M)	965-0068-00		U17	960-5010-00
Voice 2	(1M)	965-0069-00		U21	960-5009-00
Sound	(256K)	965-0070-00		U7	960-5007-00
Display	(1M)	965-0071-00	A1.06	U8	960-5009-00
Star Trek 25th Anniversary					
CPU	(512K)	965-0072-00	A2.01	C5	960-7001-02
Voice 1	(2M)	965-0073-00		U17	960-5010-00
Voice 2	(2M)	965-0074-00		U21	960-5010-00
Sound	(256K)	965-0075-00		U7	960-5007-00
Display	(1M)	965-0076-00	A1.09	U8	960-5009-00
Hook					
CPU	(512K)	965-0077-00	A4.08	C5	960-7001-02
Voice 1	(2M)	965-0078-00		U17	960-5010-00
Voice 2	(2M)	965-0079-00		U21	960-5010-00
Sound	(256K)	965-0080-00		U7	960-5007-00
Display	(1M)	965-0081-00	A4.01	U8	960-5009-00
Lethal Weapon 3					
CPU	(512K)	965-0082-00	A2.08	C5	960-7001-02
Voice 1	(2M)	965-0083-00		U17	960-5010-00
Voice 2	(2M)	965-0084-00		U21	960-5010-00
Sound	(256K)	965-0085-00		U7	960-5007-00
Display	(2M)	965-0086-00	A2.06	ROM 0	960-5010-00
Display	(2M)	965-0087-00	A2.06	ROM 1	960-5010-00
	(Used on Display PCB 520-5055-00)				
			-OR-		
Display	(4M)	965-0087-04	A2.06	ROM 0	960-5015-00
	(Used on Display PCB 520-5055-01)				
Star Wars					
CPU	(512K)	965-0119-00	A1.03	C5	960-7001-02
Voice 0	(4M)	965-0132-00		U17	960-5015-00
Voice 1	(2M)	965-0133-00		U21	960-5010-00
Sound	(256K)	965-0131-00		U7	960-5007-00
Display	(2M)	965-0120-00	A1.04	ROM 0	960-5010-00
Display	(2M)	965-0121-00	A1.04	ROM 1	960-5010-00
	(Used on Display PCB 520-5055-00)				
			-OR-		
Display	(4M)	965-0122-00	A1.05	ROM 0	960-5015-00
	(Used on Display PCB 520-5055-01)				
Rocky & Bullwinkle & Friends					
CPU	(512K)	965-0138-00	A1.30	C5	960-7001-02
Voice 0	(4M)	965-0139-00		U17	960-5015-00
Voice 1	(2M)	965-0140-00		U21	960-5010-00
Sound	(256K)	965-0141-00		U7	960-5007-00
Display	(4M)	965-0142-00	A1.30	ROM 0	960-5015-00
Jurassic Park					
CPU	(512K)	965-0143-00	A5.13	C5	960-7001-02
Voice 0	(4M)	965-0144-00		U17	960-5015-00
Voice 1	(2M)	965-0145-00		U21	960-5010-00
Sound	(256K)	965-0146-00		U7	960-5007-00
Display	(4M)	965-0147-00	A5.10	ROM 0	960-5015-00
Last Action Hero					
CPU	(512K)	965-0148-00	A1.12	C5	960-7001-02
Voice 0	(4M)	965-0149-00		U17	960-5015-00
Voice 1	(2M)	965-0150-00		U21	960-5010-00
Sound	(256K)	965-0151-00		U7	960-5007-00
Display	(4M)	965-0152-00	A1.06	ROM 0	960-5015-00
Tales from the Crypt					
CPU	(512K)	965-0157-00	A3.03	C5	960-7001-02
Voice 0	(4M)	965-0158-00		U17	960-5015-00
Voice 1	(2M)	965-0159-00		U21	960-5010-00
Sound	(256K)	965-0160-00		U7	960-5007-00
Display	(4M)	965-0161-00	A3.01	ROM 0	960-5015-00
The Who's Tommy					
CPU	(512K)	965-0162-00	A4.00	C5	960-7001-02
Voice 1	(4M)	965-0165-00		U17	960-5015-00
Voice 2	(4M)	965-0166-00		U21	960-5015-00
Voice 3	(4M)	965-0167-00		U36	960-5015-00
Voice 4	(4M)	965-0168-00		U37	960-5015-00
Sound	(512K)	965-0164-00		U7	960-7001-02
Display	(4M)	965-0163-00	A4.00	ROM 0	960-5015-00
WWF Royal Rumble					
CPU	(512K)	965-0169-00	A1.06	C5	960-7001-02
Voice 1	(4M)	965-0172-00		U17	960-5015-00
Voice 2	(4M)	965-0173-00		U21	960-5015-00
Voice 3	(4M)	965-0174-00		U36	960-5015-00
Sound	(512K)	965-0171-00		U7	960-7001-02
Display	(4M)	965-0170-00	A1.02	ROM 0	960-5015-00
Guns N' Roses					
CPU	(512K)	965-0175-00	A3.00	C5	960-7001-02
Voice 1	(4M)	965-0178-00		U17	960-5015-00
Voice 2	(4M)	965-0179-00		U21	960-5015-00
Voice 3	(4M)	965-0180-00		U36	960-5015-00
Voice 4	(4M)	965-0181-00		U37	960-5015-00
Sound	(512K)	965-0177-00		U7	960-7001-02
Display	(4M)	965-0176-00	A3.00	ROM 0	960-5015-00
Maverick *					
CPU	(512K)	965-0182-00	A4.04	C5	960-7001-02
Voice 1	(4M)	965-0186-00		U17	960-5015-00
Voice 2	(4M)	965-0187-00		U21	960-5015-00
Voice 3	(4M)	965-0187-01		U36	960-5015-00
Sound	(512K)	965-0185-00		U7	960-7001-02
Display*	(4M)	965-0183-00	A4.01	ROM 0	960-5015-00
Display*	(4M)	965-0184-00	A4.01	ROM 3	960-5015-00
Mary Shelley's Frankenstein *					
CPU	(512K)	965-0188-00	A1.03	C5	960-7001-02
Voice 1	(4M)	965-0192-00		U17	960-5015-00
Voice 2	(4M)	965-0193-00		U21	960-5015-00
Voice 3	(4M)	965-0194-00		U36	960-5015-00
Sound	(512K)	965-0191-00		U7	960-7001-02
Display*	(4M)	965-0189-00	A1.03	ROM 0	960-5015-00
Display*	(4M)	965-0190-00	A1.03	ROM 3	960-5015-00
Baywatch *	(CPU Board 520-5003-04)				
CPU	(512K)	965-0195-00	A4.00	C5	960-7001-02
Voice 1	(4M)	965-0196-00		U17	960-5015-00
Voice 2	(4M)	965-0197-00		U21	960-5015-00
Sound	(512K)	965-0199-00		U7	960-7001-02
Display*	(4M)	965-0200-00	A4.00	ROM 0	960-5015-00
Display*	(4M)	965-0201-00	A4.00	ROM 3	960-5015-00
Batman Forever *	(CPU Board 520-5003-04)				
CPU	(512K)	965-0202-00	A3.02	C5	960-7001-02
Voice 1	(4M)	965-0203-00		U17	960-5015-00
Voice 2	(4M)	965-0204-00		U21	960-5015-00
Sound	(512K)	965-0205-00		U7	960-7001-02
Display*	(4M)	965-0206-00	A3.00	ROM 0	960-5015-00
Display*	(4M)	965-0207-00	A3.00	ROM 3	960-5015-00

* ***Note:*** *Display* ***EPROMS (4M)*** *for* ***Maverick*** *thru* ***Batman Forever*** *require an access time of* ***120 Nsec*** *or faster.*

APPENDIX B

Semi-Conductors / Integrated Circuits (I.C.) / Relays Cross-Reference Table

Table №	Type	Source Number	STERN® PINBALL	N T E®	E C G®	Radio Shack®	R C A®
	RECTIFICATION, BLOCKING, DAMPENING DIODES AND/OR LIGHT EMITTING DIODES (LEDs)						
1	Diode	1N4001	112-5001-00	NTE552	ECG552	- — - — -	SK9000
	Diode	1N4004	112-5003-00	NTE116	ECG116	276-1103	SK3312
	Diode	1N5401	112-0056-00	NTE5801	ECG5801	276-1143	SK9004
	Diode	1N5404	112-5004-00	NTE5804	ECG5804	276-1144	SK9007
	Diode	T6A10L	112-5006-01	NTE5812	ECG5812	- — - — -	- — - — -
	Diode	FR302	112-5009-00	NTE588	ECG588	- — - — -	SK5014
	Diode, Signal	1N914	112-5014-00	- — - — -	- — - — -	- — - — -	- — - — -
	LED	**MT5000UR** or **TLRH180P** (T1-3/4 GaAlAs)	165-5052-00 *(old SPI Part №: 165-5100-00)*	- — - — -	- — - — -	276-066B	- — - — -
	ZENER DIODES						
2	Diode	1N4742A 12v	112-0061-00	NTE142A	ECG142A	276-563	SK12V
	Diode	1N4760B 68v	112-0062-00B	NTE5092A	ECG5092A	- — - — -	SK68V
	Diode	1N4764A 100v	112-0049-00A	NTE5096A	ECG5096A	- — - — -	SK100V
	Diode	1N5228 3.9v	112-0053-00	NTE5007A	ECG5007A	- — - — -	SK3A9
	Diode	1N5234B 6.2v	112-0047-00B	NTE5013A	ECG5013A	276-561	SK6A2
	Diode	1N5379 110v	112-0072-00	NTE5157	ECG5157	- — - — -	SK110X
	Diode	1N6267A 6.8v	112-5011-00	NTE4902	ECG4902	- — - — -	- — - — -
	Diode	1N4752A 33v	112-5010-00A	NTE147A	ECG147A	- — - — -	SK33V
	Diode	1N4736 6.8v 1w	112-5007-00	NTE5071A	ECG5071A	- — - — -	- — - — -
	TRANSISTORS - TYPE FET, NPN, PNP AND/OR SCR						
3	FET Trans.	STP20N10L	110-0106-00	NTE2987	ECG2987	- — - — -	- — - — -
	FET Trans.	STP19N06L	110-0088-00	NTE2985	ECG2985	- — - — -	- — - — -
	FET Trans.	VN02N	110-0089-00	- — - — -	- — - — -	- — - — -	- — - — -
	NPN Trans.	2N4401	110-0073-00	NTE85	ECG85	276-2009	SK3124A
	NPN Trans.	2N6427	110-0070-00	NTE48	ECG48	- — - — -	SK4906
	NPN Trans.	MJE340	110-0071-00	NTE157	ECG157	- — - — -	SK3747
	NPN Trans.	MPSA42	110-0082-00	NTE287	ECG287	- — - — -	SK3232
	NPN Trans.	2N3904	110-0069-00	NTE123AP	ECG123AP	276-2009	- — - — -
	NPN Trans.	TIP122	110-0067-00	NTE261	ECG261	276-2068	SK3896
	NPN Trans.	MJE15030	110-0101-00	NTE375	ECG375	- — - — -	SK9118
	PNP Trans.	2N5401	110-0078-00	NTE288	ECG288	- — - — -	SK3434
	PNP Trans.	MJE15031	110-0103-00	NTE292	ECG292	- — - — -	SK3441
	PNP Trans.	MJE350	110-0072-00	NTE374	ECG374	- — - — -	SK9042
	PNP Trans.	MPSA92	110-0100-00	NTE288	ECG278	- — - — -	SK3434
	PNP Trans.	TIP42	110-0068-00	NTE332	ECG332	- — - — -	SK9236
	PNP Trans.	TIP32C	110-0081-00	NTE292	ECG292	- — - — -	SK3441
	PNP Trans.	TIP36C	110-0077-00	NTE393	ECG393	- — - — -	SK3961
	SCR Trans.	2N5060	110-0074-00	NTE5400	ECG5400	276-1067	SK3950
	SCR Trans.	SCR2800B	110-0083-00	NTE5461-8	ECG5461-8	- — - — -	- — - — -
	BRIDGE RECTIFIERS (BR)			**Comments:**			
4	BR (Present)	DB3501 or CM3501	112-5000-00	For White Star I/O Bds., BR = 35 Amp @ 100v P.I.V.			
	RELAYS			**Comments:**			
5	Relay	FRL-264 D024/02CK	190-5002-00	For PPB, Power Supply, & White Star I/O Boards, Relay = 24v DC 10 Amp DPDT			
	Relay	FRL-264 D006/04CV	190-5001-00	For CPU Boards, Relay = 6v DC 5 Amp 4 Pole DT			

APPENDIX C

Production Start Date, Manual Part Nº, ROM Size & Positions and Jumper W6 Installed Note‡ (White Star Board System & S.A.M. System Only*)

	Game Name White Star Bd. System™	Production Start Date and Manual Part Nr.	CPU/Sound Board **Sound U7 512K** CPU/Sound Board **Game U210 1MB** CPU/Sound Board **Voice ROMS:** U17	U21	U36	U37	Jumper Installed (‡ see Note)
	**** Note:*** *For complete Appendix Information for Games **Laser War** through **Batman Forever**, see any Service Game Manual between **Apollo 13** through **Ripley's Believe It or Not!** or on-line at our website www.sternpinball.com/parts.htm; also available on CD-R, 970-2003-00 (**The Simpsons™ Pinball Party**, **T3®** and **The Lord of the Rings™**).*						
29	Apollo 13 (A13)	NOV 95 780-5044-00	4MB	4MB	4MB	Not Used	n / a
30	Golden Eye	FEB 96 780-5042-00	4MB	4MB	Not Used	Not Used	n / a
31	Twister	APR 96 780-5041-00	4MB	4MB	Not Used	Not Used	n / a
32	ID4: Independence Day	JUL 96 780-5045-00	4MB	4MB	Not Used	Not Used	n / a
33	Space Jam	OCT 96 780-5043-00	4MB	4MB	4MB	Not Used	n / a
34	The Star Wars Trilogy - Sp. Ed.	FEB 97 780-5056-00	4MB	4MB	Not Used	Not Used	n / a
35	The Lost World: Jurassic Park	JUN 97 780-5053-00	4MB	4MB	Not Used	Not Used	n / a
36	The X-Files	AUG 97 780-5046-00	4MB	4MB	Not Used	Not Used	n / a
37	Starship Troopers	NOV 97 780-5059-00	4MB	4MB	4MB	Not Used	n / a
38	Viper Night Drivin'	FEB 98 780-5035-00	4MB	4MB	4MB	4MB	n / a
39	Lost In Space	JUN 98 780-5060-00	4MB	4MB	4MB	4MB	n / a
40	Godzilla	SEP 98 780-5040-00	4MB	4MB	4MB	4MB	n / a
41	South Park	JAN 99 780-5071-00	8MB	8MB	8MB	8MB	W6
42 a	Harley-Davidson®	AUG 99 780-5067-01	8MB	8MB	8MB	8MB	W6
42 b	Harley-Davidson®2nd Ed.	SEP 02 780-5067-10	8MB	8MB	8MB	8MB	W6
42 c	Harley-Davidson® 3rd Ed.	OCT 04 780-5087-00	8MB	8MB	8MB	8MB	W6
43 a	Striker Xtreme	MAR 00 780-5068-01	8MB	8MB	8MB	8MB	W6
43 b	NFL	OCT 00 780-5073-00	8MB	8MB	8MB	8MB	W6
44	Sharkey's Shootout	JUL/OCT 00 780-5072-01	8MB	8MB	8MB	Not Used	W6
45	High Roller Casino	JAN 01 780-5065-00	8MB	8MB	8MB	8MB	W6
46	Austin Powers™	MAY 01 780-5074-00	8MB	8MB	8MB	8MB	W6
47	MONOPOLY®	SEP 01 780-5075-00	8MB	8MB	8MB	Not Used	W6
48	Playboy	FEB 02 780-5076-00	8MB	8MB	8MB	8MB	W6
49	RollerCoaster Tycoon™	AUG 02 780-5078-00	8MB	8MB	8MB	Not Used	W6
50	The Simpsons™ Pinball Party	JN 03/JL 07 780-5077-08	8MB	8MB	8MB	8MB	W6
51	T3®: Rise of the Machines™	MAY 03 780-5079-00	8MB	8MB	8MB	8MB	W6
52	The Lord of the Rings™	NOV 03 780-5080-00	8MB	8MB	8MB	8MB	
53	Ripley's Believe It or Not!®	APR 04 780-5081-00	8MB	8MB	8MB	8MB	

‡ *Additional Information for **Installed** Jumper (above games 41-51):*

- *Installed **W6** so 8MB ROMS can be utilized. See the **CPU/Sound Board Schematic** (Sheet 2 of 3, Address Location 3E) in the games' Service Game Manual. Games 52 - 57 CPU/Sound Board differ than <51 (See Appendix D).*

See **Apdx. A** for more detailed information on **Pinball Game Firmware** *(ROM Name, Size, Part Numbers, USA Version & Checksum and Board Locations).*

	Game Name White Star Board System™	Production Start Date and Manual Part Nr.	CPU/Sound Board **Sound U7 512K** CPU/Sound Board **Game U210 1MB** CPU/Sound Board **Voice ROMS:** U17	U21	U36	U37
54	Elvis®	AUG 04 780-5084-00	8MB	8MB	8MB	8MB
55	The Sopranos℠	FEB 05 780-5085-00	8MB	8MB	8MB	8MB
56	NASCAR®	JUL 05 780-5086-00	8MB	8MB	8MB	8MB
56 SE	Dale Jr. NASCAR® Special Edition	AUG 07 780-5097-00	8MB	8MB	8MB	8MB
57	Grand Prix	SEP 05 780-5091-00	8MB	8MB	8MB	8MB

See **Apdx. A** for more detailed information on **Pinball Game Firmware** *(ROM Name, Size, Part Numbers, USA Version & Checksum and Board Locations).*

	Game Name S.A.M. System	Production Start Date and Manual Part Nr.	S.A.M. System CPU/Sound Board Boot EPROM **U9** 965-BOOT-SAM *(Programmed)*			
58	World Poker Tour™ (WPT)	JUN 06 780-5088-00	8MB	B-02 V2.1+	chksum $F625	LOC: U9
59	The Simpsons™ Kooky Carnival	APR 06 780-5090-00	8MB	B-02 V2.1+	chksum $F625	LOC: U9
60	©Disney's Pirates of the Caribbean	AUG 06 780-5092-00	8MB	B-02 V2.1+	chksum $F625	LOC: U9
61	Famil Guy™	DEC 06 780-5093-00	8MB	B-02 V2.1+	chksum $F625	LOC: U9
62	Spider-Man™	MAY 07 780-5094-00	8MB	B-02 V2.1+	chksum $F625	LOC: U9
62 SE	Black Spider-Man™	NOV 07 780-50A6-00	8MB	B-02 V2.1+	chksum $F625	LOC: U9
63	Wheel of Fortune™	NOV 07 780-5098-00	8MB	B-02 V2.3+	chksum $B83B	LOC: U9
64	SHREK™	JAN 08 780-50A5-00	8MB	B-02 V2.3+	chksum $B83B	LOC: U9
65	Indiana Jones™	APR 08 780-50A4-00	8MB	PE-2 V3.1+	chksum $4CF6	LOC: U9
66	BATMAN™	AUG 08 780-50A3-00	8MB	PE-2 V3.1+	chksum $4CF6	LOC: U9

Games 58 – current, S.A.M. System : CPU/Sound & I/O Power Driver PCBs differ than White Star *(previous Games 29 – 57)*; Disp. Controller Not Required.

APPENDIX D

Board Type (White Star Board System* Only) Table

Game Name	Flipper	I/O Power Driver	CPU/Sound Stereo	Disp. Power Supply	Dot Matrix Display	Display Controller	OPTO Transmitter	OPTO Receiver	OPTO Application
Apollo 13	520-5080-00 2-Flipper	520-5137-00	520-5136-00	520-5138-00	520-5052-00 128 X 32 Dots	520-5055-01	520-5124-00 Single OPTO	520-5125-00 Single OPTO	5-Ball Trough over Up-Kicker
	Miscellaneous PC Boards:	Light Boards 520-5130-01, -04 & -05 Magnet Interface, 7-Segment Display & Light Bd. 520-5130-06 Magnet Driver Board 520-5130-02 Switch Membrane Board 520-5130-03				Relay Board 520-5010-00			
Golden Eye	520-5080-00 2-Flipper	520-5137-00	520-5136-00	520-5138-00	520-5052-00 128 X 32 Dots	520-5055-01	520-5124-00 Single OPTO	520-5125-00 Single OPTO	5-Ball Trough over Up-Kicker
	Miscellaneous PC Boards:	Light Boards 520-5128-05 through -08		Mag. Processor X2 Driver Bd. 520-5143-00		Relay Board 520-5010-00			

GAMES HEREON NO LONGER REQUIRE THE FLIPPER BOARD WITH THE WHITE STAR BOARD SYSTEM™

Game Name	I/O Power Driver	CPU/Sound Mono	Disp. Power Supply	Dot Matrix Display	Display Controller	OPTO Transmitter	OPTO Receiver	OPTO Application	Misc OPTO & App.
Twister	520-5137-01	520-5136-10	520-5138-00	520-5052-00 128 X 32 Dots	520-5055-01	520-5124-00 Single OPTO	520-5125-00 Single OPTO	5-Ball Trough over Up-Kicker	
	Miscellaneous PC Boards:	Light Boards 520-5145-01 through -07		Mag. Drv. Bd. 520-5143-00	Relay Board 520-5010-00				
Independence Day (ID4)	520-5137-01	520-5136-10	520-5138-00	520-5052-00 128 X 32 Dots	520-5055-01	520-5124-00 Single OPTO	520-5125-00 Single OPTO	4-Ball Trough over Up-Kicker	
	Miscellaneous PC Boards:	Light Boards 520-5149-01 through -10		Servo Mtr. Bd. 520-5152-00		520-5082-00 Long Hop OPTO	520-5083-00 Long Hop OPTO	Alien Head Enter	
Space Jam	520-5137-01	520-5136-10	520-5138-00	520-5052-00 128 X 32 Dots	520-5055-01	520-5124-00 Single OPTO	520-5125-00 Single OPTO	5-Ball Trough over Up-Kicker	
	Miscellaneous PC Boards:	2X 7-Segment Display Board 520-5153-00							
The Star Wars Trilolgy - Special Ed.	520-5137-01	520-5136-10	520-5138-00	520-5052-00 128 X 32 Dots	520-5055-01	520-5124-00 Single OPTO	520-5125-00 Single OPTO	4-Ball Trough over Up-Kicker	
	Miscellaneous PC Boards:	Relay Board 520-5010-00							
The Lost World: J.P.	520-5137-01	520-5136-10	520-5138-00	520-5052-00 128 X 32 Dots	520-5055-01	520-5124-00 Single OPTO	520-5125-00 Single OPTO	4-Ball Trough over Up-Kicker	520-5162-00 2-Pos. Motor Sensor on Snagger Motor
	MiscellaneousPC Boards:	DC Relay Bd. 520-5066-00	Shaker Mtr. Bd. 520-5065-00						
The X-Files	520-5137-01	520-5136-10	520-5138-00	520-5052-00 128 X 32 Dots	520-5055-01	520-5124-00 Single OPTO	520-5125-00 Single OPTO	4-Ball Trough over Up-Kicker	520-5155-00 3-Pos. Motor Sensor on File Cab. Motor
	Miscellaneous PC Boards:					520-5082-00 Long Hop OPTO	520-5083-00 Long Hop OPTO	File Cabinet Enter	
Starship Troopers	520-5137-01	520-5136-15	520-5138-00	520-5052-00 128 X 32 Dots	520-5055-02	520-5124-00 Single OPTO	520-5125-00 Single OPTO	4-Ball Trough over Up-Kicker	
	Miscellaneous PC Boards:	4X 7-Segment Display Board 520-5166-00				520-5082-00 Long Hop OPTO	520-5083-01 Long Hop OPTO	L/R Orbit Lane Enter	
Viper Night Drivin'	520-5137-01	520-5136-16	520-5138-00	520-5052-00 128 X 32 Dots	520-5055-03	520-5124-00 Single OPTO	520-5125-00 Single OPTO	4-Ball Trough over Up-Kicker	
	Miscellaneous PC Boards:	Relay Board 520-5010-00				520-5082-00 Long Hop OPTO	520-5083-01 Long Hop OPTO	Jump Ramp	
Lost In Space	520-5137-01	520-5136-16	520-5138-00	520-5052-00 128 X 32 Dots	520-5055-03	515-0173-00 Dual OPTO	515-0174-00 Dual OPTO	4-Ball Trough over Up-Kicker	
	Miscellaneous PC Boards:	Relay Board 520-5010-00							
Godzilla	520-5137-01	520-5136-16	520-5138-00	520-5052-00 128 X 32 Dots	520-5055-03	515-0173-00 Dual OPTO	515-0174-00 Dual OPTO	4-Ball Trough over Up-Kicker	
	Miscellaneous PC Boards:	Shaker Mtr. Bd. 520-5065-00							
South Park	520-5137-01	520-5136-16	520-5138-00	520-5052-00 128 X 32 Dots	520-5055-03	515-0173-00 Dual OPTO	515-0174-00 Dual OPTO	5-Ball Trough over Up-Kicker	
	Miscellaneous PC Boards:					520-5082-00 Long Hop OPTO	520-5083-01 Long Hop OPTO	Kenny Under Trough Enter	
Harley-Davidson® 1st-3rd* Editions	520-5137-01	520-5136-16 *520-5300-00*	520-5138-00	520-5052-00 128 X 32 Dots	520-5055-03	515-0173-00 Dual OPTO	515-0174-00 Dual OPTO	4-Ball Trough over Up-Kicker	
	Miscellaneous PC Boards:	Relay Board 520-5010-00	Shaker Mtr. Bd. 520-5065-00	Diode Board 520-5146-00		520-5082-00 Long Hop OPTO	520-5083-01 Long Hop OPTO	Motorcycle Enter	
Striker Xtreme (NFL)	520-5137-01	520-5136-16	520-5138-00	520-5052-00 128 X 32 Dots	520-5055-03	515-0173-00 Dual OPTO	515-0174-00 Dual OPTO	4-Ball Trough over Up-Kicker	520-5155-00 3-Pos. Motor Sensor on Goalie Motor
	Miscellaneous PC Boards:	DC Relay Bd. 520-5066-00	Relay Board 520-5010-00	Diode Board 520-5146-00	for UK ONLY> Solenoid Expander Bd. 520-5192-00	520-5082-00 Long Hop OPTO	520-5083-01 Long Hop OPTO	Goalie Under-Trough Enter	
Sharkey's Shootout	520-5137-64	520-5136-64	520-5138-00	520-5052-00 128 X 32 Dots	520-5055-03	515-0173-00 Dual OPTO	515-0174-00 Dual OPTO	4-Ball Trough over Up-Kicker	520-5194-00 4-Pos. Motor Sensor on ?-Ball Motor
	MiscellaneousPC Boards:	Relay Board 520-5010-00	Sol. Exp. Bd. 520-5192-00						
High Roller Casino	520-5137-01	520-5136-16	520-5138-00	520-5052-00 128 X 32 Dots	520-5055-03	515-0173-00 Dual OPTO	515-0174-00 Dual OPTO	4-Ball Trough over Up-Kicker	520-5194-00 4-Pos. Motor Sensor on Roulette Wheel Motor
						520-5082-00 Long Hop OPTO	520-5083-01 Long Hop OPTO	Ball Lock under Roulette	
	Miscellaneous PC Boards:	Dot Display (5X7) in Slot Mach. 520-5197-00			for UK ONLY> Solenoid Expander Bd. 520-5192-00	520-5196-00 3-Pos. OPTO	520-5195-00 3-Pos. OPTO	Up/Dn Ramp in Slot Mach.	
Austin Powers™	520-5137-01	520-5136-16	520-5138-00	520-5052-00 128 X 32 Dots	520-5055-03	515-0173-00 Dual OPTO	515-0174-00 Dual OPTO	4-Ball Trough over Up-Kicker	520-5212-00 Pulse-Stretcher OPTO on Spini-Me
	MiscellaneousPC Boards:	Relay Bd. (X3) 520-5010-00			for UK ONLY> Solenoid Expander Bd. 520-5192-00	520-5082-00 Long Hop OPTO	520-5083-01 Long Hop OPTO	Time Machine Ramp	
MONOPOLY®	520-5137-01	520-5136-16	520-5138-00	520-5052-00 128 X 32 Dots	520-5055-03	515-0173-00 Dual OPTO	515-0174-00 Dual OPTO	4-Ball Trough over Up-Kicker	
	MiscellaneousPC Boards:	DC Relay Bd. 520-5066-00	Mini-Dot Display (3 by 5X7) 520-5197-00 (Electric C° Sign)		for UK ONLY> Solenoid Expander Bd. 520-5192-00	520-5218-00 4-Pos. OPTO	520-5210-00 4-Pos. OPTO	Bank Door	

Table continued on the next page.

APPENDIX D

Board Type (White Star Board System* & S.A.M. System** Only) Table

Game Name	I/O Power Driver	CPU/Sound (old & new)	Disp. Power Supply	Dot Matrix Display	Display Controller	OPTO Transmitter	OPTO Receiver	OPTO Application	Misc OPTO & App.
Playboy	520-5137-01	520-5136-16	520-5138-00	520-5052-00 128 X 32 Dots	520-5055-03	515-0173-00 Dual OPTO	515-0174-00 Dual OPTO	4-Ball Trough over Up-Kicker	
	Miscellaneous PC Boards:	DC Relay Bd. 520-5066-00	Relay Bd. 520-5010-00		for UK ONLY> Solenoid Expander Bd. 520-5192-00				
RollerCoaster Tycoon™	520-5137-01	520-5136-16	520-5138-00	520-5052-00 128 X 32 Dots	520-5055-03	515-0173-00 Dual OPTO	515-0174-00 Dual OPTO	4-Ball Trough over Up-Kicker	520-5222-00 1-Position Switch Detect on Wheel Spin
	Miscellaneous PC Boards:	DC Relay Bd. 520-5066-00	Mini-Dot Display (3 by 5X7) 520-5221-00 (Ramp Enter Sign)		for UK ONLY> Solenoid Expander Bd. 520-5192-00	520-5082-00 Long Hop OPTO	520-5083-01 Long Hop OPTO	Behind 1-Bank Drop Target	
The Simpsons™ Pinball Party	520-5137-01	520-5136-16	520-5138-00	520-5052-00 128 X 32 Dots	520-5055-03	515-0173-00 Dual OPTO	515-0174-00 Dual OPTO	4-Ball Trough over Up-Kicker	
	Miscellaneous PC Boards:	LED Bd. 520-5219-00	Color Dot Display (4 by 5X7) 520-5225-00 (TV Set)		for UK ONLY ◀◀◀ Aux. Driver Bd. 520-5068-01				
Terminator® 3: Rise of the Machines™	520-5137-01	**520-5136-16**	520-5138-00	520-5052-00 128 X 32 Dots	520-5055-03	515-0173-00 Dual OPTO	515-0174-00 Dual OPTO	4-Ball Trough over Up-Kicker	
	Miscellaneous PC Boards:				for UK ONLY ◀◀◀ Aux. Driver Bd. 520-5068-01	515-7307-00 Single OPTO	515-7308-00 Single OPTO	TXCannon Trough	
The Lord of the Rings™	520-5137-01	***New* 520-5300-00**	520-5138-00	520-5052-00 128 X 32 Dots	520-5055-03	515-0173-00 Dual OPTO	515-0174-00 Dual OPTO	4-Ball Trough over Up-Kicker	500-6746-00 (White Trans.) 500-6747-00 (Black Rec.)
	Miscellaneous PC Boards:	19-LED PCB 520-5242-00	OPTO Transmitter / Receiver Amplifier PCB 520-5239-00		for UK ONLY ◀◀◀ Aux. Driver Bd. 520-5068-01	515-7307-00 Single OPTO	515-7308-00 Single OPTO	Orthanc Tower Trough	
Ripley's Believe It or Not!®	520-5137-01	520-5300-00	520-5138-00	520-5052-00 128 X 32 Dots	520-5055-03	515-0173-00 Dual OPTO	515-0174-00 Dual OPTO	4-Ball Trough over Up-Kicker	500-6775-00 OPTO Trnscvr
	Miscellaneous PC Boards:	520-5236-00 X3 Dot Display	OPTO Transmitter / Receiver Amplifier PCB 520-5239-01		for UK ONLY ◀◀◀ Aux. Driver Bd. 520-5068-01	520-5234-00 3-Pos. OPTO	520-5234-00 3-Pos. OPTO	Vari-Target	520-5235-03 X3 Aux. Drvr
Elvis®	520-5137-01	520-5300-00	520-5138-00	520-5052-00 128 X 32 Dots	520-5055-03	515-0173-00 Dual OPTO	515-0174-00 Dual OPTO	4-Ball Trough over Up-Kicker	
	Miscellaneous PC Boards:				for UK ONLY ◀◀◀ Aux. Driver Bd. 520-5068-01				
The Sopranos℠	520-5137-01	520-5300-00	520-5138-00	520-5052-00 128 X 32 Dots	520-5055-03	515-0173-00 Dual OPTO	515-0174-00 Dual OPTO	4-Ball Trough over Up-Kicker	
	Miscellaneous PC Boards:				for UK ONLY ◀◀◀ Aux. Driver Bd. 520-5068-01				
NASCAR® and [NDSE]	520-5137-01	520-5300-00	520-5138-00	520-5052-00 128 X 32 Dots	520-5055-03	515-0173-00 Dual OPTO	515-0174-00 Dual OPTO	4-Ball Trough over Up-Kicker	500-6775-00 OPTO Trans. (Qty. 16) Switch Detect.
	Miscellaneous PC Boards:	520-5235-03 X3 Aux. Drvr	OPTO Transmitter / Receiver Amplifier PCB 520-5239-01		for UK ONLY ◀◀◀ Aux. Driver Bd. 520-5068-01				
Grand Prix	520-5137-01	520-5300-00	520-5138-00	520-5052-00 128 X 32 Dots	520-5055-03	515-0173-00 Dual OPTO	515-0174-00 Dual OPTO	4-Ball Trough over Up-Kicker	500-6775-00 OPTO Trans. (Qty. 16) Switch Detect.
	Miscellaneous PC Boards:	520-5235-03 X3 Aux. Drvr	OPTO Transmitter / Receiver Amplifier PCB 520-5239-01		for UK ONLY ◀◀◀ Aux. Driver Bd. 520-5068-01				

Game Name	I/O Power Driver**	CPU / Sound**	Disp. Power Supply	Dot Matrix Display	Dual OPTO Transmitter	Dual OPTO Receiver	Dual OPTO Transceiver	OPTO Transceiver Miscellaneous
World Poker Tour™ (WPT)	**520-5249-00** Backbox	**520-5246-00** Backbox	520-5138-00 Backbox	520-5052-00 128 X 32 Dots	515-0173-00 4-Ball Trough	515-0174-00 4-Ball Trough	500-6775-00 4 Switch Pairs (Qty. 8)	520-5251-00 'U' 1/per PCB Jail Bars Up Ace/Hole Mech
	Miscellaneous **PCBs :**	520-5254-00 **50V Step-Up** Drv	520-5250-14 **14LED 5X7 Disp.**	520-5239-01 **OPTO** Amplifier	520-5247-00 Ace/Hole Mech	520-5248-00 Ace/Hole Mech		520-5252-04 'U' 4/per PCB Drop Targets 4- & 8- Banks
The Simpsons™ Kooky Carnival	**520-5249-00** Back Door	**520-5246-00** Back Door	520-5138-00 Cabinet Rear	520-5052-00 128 X 32 Dots			**520-5253-00-ASY** Coin Drop (Qty. 11)	
	Miscellaneous **PCBs :**	515-5742-00 Shaker PCB	500-6700-00 Relay *(incl. Wiring + Conn.)*					
©Disney's Pirates of the Caribbean	**520-5249-00** Backbox	**520-5246-00** Backbox	520-5138-00 Backbox	520-5052-00 128 X 32 Dots	515-0173-00 4-Ball Trough	515-0174-00 4-Ball Trough	500-6775-00 5 Switch Pairs (Qty. 10)	
	Miscellaneous **PCBs :**	520-5239-01 **OPTO Amp. (X3)**	511-5024-03 Relay *(incl. Wiring + Conn.)*					
		520-5238-00 : H-E-A-R-T LED PCB						
Family Guy™ & SHREK™	**520-5249-00** Backbox	**520-5246-00** Backbox	520-5138-00 Backbox	520-5052-00 128 X 32 Dots	515-0173-00 4-Ball Trough	515-0174-00 4-Ball Trough	500-6775-00 3 Switch Pairs (Qty. 6)	520-5252-01 'U' 1/per PCB Drop Target 1-Bank
	Miscellaneous **PCBs :**	520-5239-01 **OPTO Amp. (X2)**	520-5261-00 Stepper Motor	511-5042-01 **Trgt. Sensor (X2)**			500-6775-01 1 Switch Pair (Qty. 2)	520-5252-04 'U' 4/per PCB Drop Target 4-Bank
		511-5046-00 : Mini Playfield Lamp PCB						
Spider-Man™ & Black Spider-Man	**520-5249-00** Backbox	**520-5246-00** Backbox	520-5138-00 Backbox	520-5052-00 128 X 32 Dots	515-0173-00 4-Ball Trough	515-0174-00 4-Ball Trough	500-6775-00 3 Switch Pairs (Qty. 6)	
	Miscellaneous **PCBs :**	520-5239-01 **OPTO Amp. (X2)**						
Wheel of Fortune™	**520-5249-00** Backbox	**520-5246-00** Backbox	520-5138-00 Backbox	520-5052-00 128 X 32 Dots	515-0173-00 4-Ball Trough	515-0174-00 4-Ball Trough	500-6775-01 2 Switch Pairs (Qty. 4)	520-5255-00 In-Line OPTO PCB Drop Target Module (1/per)
	Miscellaneous **PCBs :**	520-5239-01 **OPTO T/R Amp.**	520-5274-00 Mini-Dot Display 5X7 X5 PCB					520-5283-00 Wheel of Fortune LED & OPTO Transceiver PCB
Indiana Jones™	**520-5249-00** Backbox	**520-5246-00** Backbox	520-5138-00 Backbox	520-5052-00 128 X 32 Dots	515-0173-00 5-Ball Trough	515-0174-00 5-Ball Trough	500-6775-01 2 Switch Pairs (Qty. 4)	520-5251-01 'U' Interuptor PCB Swordsman Assembly
	Miscellaneous **PCBs :**	520-5287-00 Lamp X20	520-5289-00 LED (X2 Flash) (Qty. 4)					
BATMAN™	**520-5249-00** Backbox	**520-5246-00** Backbox	520-5138-00 Backbox	520-5052-00 128 X 32 Dots	515-0173-00 4-Ball Trough	515-0174-00 4-Ball Trough		520-5291-00 'U' Interuptor PCB Driver Disc (Joker Motor) Asm. 520-5292-00 'U' Interuptor PCB Idler Disc (Joker Motor) Asm.
	Miscellaneous **PCBs :**	520-5290-00 Crane OPTO & LED Lamp						

APPENDIX D

Board Type Table

Game Name	Flipper	Sound	Power Supply	Display X-Digit
• Laser War	2-Flipper **Board Not Required**	***initial:*** 520-5002-00 ***replaced with:*** 520-5002-02 *520-5002-01 was not used.*	520-5000-00	Master: 520-5004-00 plus: 520-5005-00 (Qty. 2): 7 Digit Alpha/Numeric 520-5006-00 (Qty. 2): 7 Digit Numeric 520-5007-00 (Qty. 1): 4 Digit Numeric
• Secret Service • Torpedo Alley	3-Flipper **Board Not Required**	520-5002-02		520-5014-01 7 Digit Alpha/Numeric Combined
• Time Machine	2-Flipper **Board Not Required**			
• Playboy 35th Anniversary * • ABC Monday Night Football * • *Robocop* • *Phantom of the Opera* • *Back to the Future*	520-5033-00 2-Flipper *(*only for 100 games of Playboy 35th Anniv. & ABC Mon. Night Football)*			520-5030-00 16 Digit Alpha/Numeric Combined
• The Simpsons		520-5002-**03**		

Game Name	Flipper	Sound	Power Supply	Dot Matrix Display	Display Controller	OPTO Transmitter	OPTO Receiver	OPTO Apllication
• Checkpoint • Teenage Mutant Ninja Turtles	520-5033-00 2-Flipper	520-5002-03	520-5047-00	520-5042-00 128 X 16				
• Batman • Star Trek 25th Anniv. • Hook		520-5050-01						
• Lethal Weapon 3			520-5047-01	520-5052-00 128 X 32	520-5055-00			
• Star Wars • Rocky & Bull-winkle & Friends		520-5050-02						
• Jurassic Park	520-5076-00 3-Flipper		520-5047-02					
• Last Action Hero	520-5070-00 2-Flipper	520-5050-03						
• Tales from the Crypt	520-5076-00 3-Flipper				520-5055-01			
• The Who's Tommy		520-5077-00						
• WWF Royal Rumble	**520-5070 / 5080 -00** 4-Flipper (2X2)							
• Guns N' Roses	520-5076-00 3-Flipper							
• Maverick		520-5050-03	520-5047-03	520-5075-00 192 X 64	520-5092-01	520-5102-00 Single OPTO	520-5103-00 Single OPTO	Paddle Boat Wheel Enter
• Mary Shelley's Frankenstein	520-5076-00 3-Flipper	520-5077-00						
• Baywatch	**520-5070 / 5080 -00** 4-Flipper (2X2)	520-5126-02				520-5124-00 Single OPTO	520-5125-00 Single OPTO	5-Ball Trough over Up-Kicker
• Batman Forever	520-5076-00 3-Flipper					520-5124-00 Single OPTO	520-5125-00 Single OPTO	4-Ball Trough over Up-Kicker

Miscellaneous Boards (Lamp Boards & Relay Boards) not listed above can be found in each individual game manual.

APPENDIX E

Flipper Coil (White Star Board System* & S.A.M. System** Only) Table

Typical Coil Diode 1N4004 unless noted otherwise (Diode Top = above lugs next to windings; Diode Below (Bottom) = under lugs opposite of windings).

STANDARD COILS (TYPICAL APPLICATIONS)		
Ga.-Turn	**Res (Ω)**	**SPI Part Number and Comments**
20-400	1.0 Ω	090-5021-*use* : **-00** Diode Top
22-500	1.7 Ω	090-5017-*use* : -00 Diode Top
22-600	2.2 Ω	090-5017-*use* : -0B Diode Below // **-0T** Diode Top
23-700	3.1 Ω	090-5022-*use* : -0B Diode Below // **-0T** Diode Top
23-750	3.4 Ω	090-5019-*use* : -00 Diode Top
23-800	3.6 Ω	090-5001-*use* : -0B Diode Below // **-0T** Diode Top // **-NL** No Lugs 11" Leads // **-ND** No Diode
23-840	4.0 Ω	090-5005-*use* : -00 Diode Top
23.5-765	3.6 Ω	090-5037-*use* : -03 Diode Top
24-900	5.0 Ω	090-5002-*use* : -02 Diode Top // **-10** No Lugs 14" Leads
24-940	5.5 Ω	090-5036-*use* : -0B Diode Below // **-0T** Diode Top *use* **090-5051-01** No Lugs 11" Leads
25-1240	9.3 Ω	090-5034-*use* : -00 Diode Below
26-1200	10.3 Ω	090-5044-*use* : -0B Diode Below // **-0T** Diode Top // **-NL** No Lugs 11" Leads // **-ND** No Diode
27-1300	14.2 Ω	090-5003-*use* : -0T Diode Top
27-1400	14.7 Ω	090-5015-*use* : -00 Diode Below
27-1400		**511-5031-00** *Special App.: No Diode / Lugs + Conn.*
27-1500	16.3 Ω	090-5004-*use* : -0B Diode Below // **-0T** Diode Top
29-2000	33.6 Ω	090-5016-*use* : -00 Diode Top

LARGE, MEDIUM & MINI COILS (MAGNET APPLICATIONS)		
20.5-480	2.9 Ω	090-5064-*use* : -02 No Lugs *or* Core; 14" Leads // Large
22-650	4.3 Ω	090-5042-*use* : -00 No Lugs *or* Core; 6" Leads // Large **-01** No Lugs *or* Core; 12" Leads // Large
24-780	8.0 Ω	090-5061-*use* : -00 No Lugs *or* Core; 6" Lds. // Medium
29-1000	15.2 Ω	090-5059-*use* : -00 Lugs + Diode + Magnet Core // Mini
31-1500	52.0 Ω	090-5**54**-00 : Straight Lugs + Diode + Mag Core // Mini 090-5**55**-00 : 90° Lugs + Diode + Magnet Core // Mini

Please Note: *Ohm values may vary **+ / – .03** depending on meter calibration.*

Ordering Note: *Coils typically should not come with Coil Sleeves.* ***IF A SLEEVE EXISTS****, ensure it is the correct sleeve for the application usage. For the correct Coil Sleeve, refer to the Game Assembly Drawing the coil exists on and order separately.*

LARGE COILS (FLIPPERS & SPECIAL APPLICATIONS)		
Ga.-Turn	**Res (Ω)**	**SPI Part Number and Comments**
21-900	*call* Ω	090-5020-*use* : **-01** 3-Lugs + 1N4004 & 1N5404 Diodes **-10** Diode Top <BROWN><RED>
22-750 / 30-2600	2.6 Ω 92.0 Ω	090-5011-*use* : **-00 DUAL WND COIL** // 3-Lugs Diode x2
22-900	3.45 Ω	090-5020-*use* : -20T Diode Top <YELLOW> // **-20-ND** No Diode
22-1080	4.2 Ω	090-5032-*use* : -0B D. Below // **-0T** D. Top <YEL-GRN> **-NL** No Diode
23-620 / 30-2600	2.4 Ω 75.0 Ω	090-5006-*use* : -00 **DUAL WND COIL** // 3-Lugs Diode x2
23-700 / 30-2600	3.0 Ω 83.5 Ω	090-5013-*use* : -00 **DUAL WOUND COIL** // Diode Top
23-800 / 30-2600	2.4 Ω 90.5 Ω	090-5012-*use* : -00 **DUAL WOUND COIL** // Diode Top
23-900	4.05 Ω	090-5020-*use* : -30 Diode Top <GREEN>
23-1100	5.1 Ω	090-5030-*use* : -0T Diode Top <ORANGE> **-ND** No Diode
23-1200	7.1 Ω	090-5008-*use* : -00 Diode Top <BLACK>
23-1500	4.4 Ω	090-5062-*use* : -00 Diode Top <BLUE>
24-1570	9.5 Ω	090-5025-*use* : -00 Diode Top <BLUE>
25-1400	*call* Ω	090-5067-*use* : -0T Diode Top <RED>
25-1600	*call* Ω	090-5068-*use* : -0T Diode Top <WHITE>
25-1800	13.8 Ω	090-5041-*use* : -0T Diode Top <BLUE-GREEN>

MINI COILS (RESET / TRIP APPLICATIONS)		
27-950	*call* Ω	090-5046-*use* : -01 Diode Top
28-1050	11.5 Ω	090-5046-*use* : -00 Diode Top
27-880	*call* Ω	500-6976-01 No Lugs *or* Diode + 6" Leads & Conn.
31-590	*call* Ω	090-5010-*use* : -00 Diode Top
32-1250	35.0 Ω	**515-6916-01** : *includes Flap & Screw* <YELLOW>
32-1800	50.2 Ω	090-5031-*use* : (515-6110-00) -0B Diode Below // **-0T** Diode Top *use 515-# to include mounting & armature brackets*
33-1590	59.0 Ω	**515-6916-00** : *includes brackets* <WHITE>

Flipper Coil (White Star Board System* Only) Table

GAME NAME	Nº of Flippers	FLIPPERS		FLIPPERS no E.O.S. Switch	
		SPI Nº / GAUGE-TURNS / Color		SPI Nº / GAUGE-TURNS / Color	
		LOWER LEFT	LOWER RIGHT	UPPER LEFT	UPPER RIGHT
* ***Note:*** *For complete Appendix Information for Games **Laser War** through **Batman Forever**, see any Service Game Manual between **Apollo 13** through **Ripley's Believe It or Not!**; or order CD-R, 970-2003-00 (**The Simpsons™ Pinball Party**, **Terminator® 3** and **The Lord of the Rings™**).*					
Apollo 13	2	090-5032-0T **22-1080 -YEL-GRN-**	SAME	Not Used	Not Used
Golden Eye	2	090-5032-0T **22-1080 -YEL-GRN-**	SAME	Not Used	Not Used
Twister	2	090-5020-20T **22-900 -YELLOW-**	090-5032-0T **22-1080 -YEL-GRN-**	Not Used	Not Used
ID4: Independence Day	3	090-5032-0T **22-1080 -YEL-GRN-**	SAME	Not Used	090-5020-30 **23-900 -GREEN-**
Space Jam †	2	090-5032-0T **22-1080 -YEL-GRN-**	090-5020-20T **22-900 -YELLOW-**	Not Used	Not Used
The Star Wars Trilogy - Special Edition †	2	090-5032-0T **22-1080 -YEL-GRN-**	SAME	Not Used	Not Used
The Lost World: Jurassic Park †	2	090-5032-0T **22-1080 -YEL-GRN-**	SAME	Not Used	Not Used
The X-Files †	2	090-5032-0T **22-1080 -YEL-GRN-**	SAME	Not Used	Not Used
Starship Troopers †	3	090-5030-0T **23-1100 -ORANGE-**	SAME	Not Used	090-5032-0T **22-1080 -YEL-GRN-**
Viper Night Drivin' †	2	090-5030-0T **23-1100 -ORANGE-**	SAME	Not Used	Not Used
Lost In Space †	2	090-5030-0T **23-1100 -ORANGE-**	090-5032-0T **22-1080 -YEL-GRN-**	Not Used	Not Used
Godzilla †	2	090-5032-0T **22-1080 -YEL-GRN-**	SAME	Not Used	Not Used
South Park †	2	090-5030-0T **23-1100 -ORANGE-**	SAME	Not Used	Not Used

† Coil Part Numbers ending with a "**T**" signifies the Diode is on the top of the lug *(on the coil-winding side)*;
Coil Part Numbers ending with a "**B**" signifies the Diode is on the bottom of the lugs.

Table continued on the next page.

APPENDIX E

Flipper Coil (White Star Board System* & S.A.M. System** Only) Table

GAME NAME	№ of Flippers	FLIPPERS w/E.O.S. Switch		FLIPPERS no E.O.S. Switch	
		SPI № / GAUGE-TURNS / Color		SPI № / GAUGE-TURNS / Color	
		LOWER LEFT	LOWER RIGHT	UPPER LEFT	UPPER RIGHT
Harley-Davidson® † *and 1st through 3rd Editions*	2	090-5032-0T **22-1080 -YEL-GRN-**	090-5030-0T **23-1100 -ORANGE-**	Not Used	Not Used
Striker Xtreme (NFL) †	3	090-5032-0T **22-1080 -YEL-GRN-**	090-5030-0T **23-1100 -ORANGE-**	090-5030-0T **23-1100 -ORANGE-**	Not Used
Sharkey's Shootout †	3	090-5030-0T **23-1100 -ORANGE-**	SAME	090-5030-0T **23-1100 -ORANGE-**	Not Used
High Roller Casino †	2	090-5020-20T **22-900 -YELLOW-**	090-5032-0T **22-1080 -YEL-GRN-**	Not Used	Not Used
Austin Powers™ †	2	090-5020-30 **23-900 -GREEN-**	090-5030-0T **23-1100 -ORANGE-**	Not Used	Not Used
MONOPOLY® †	3	090-5032-0T **22-1080 -YEL-GRN-**	SAME	Not Used	090-5062-0T **23-1500 -BLUE-**
Playboy †	2	090-5030-0T **23-1100 -ORANGE-**	SAME	Not Used	Not Used
RollerCoaster Tycoon™ †	4	090-5032-0T **22-1080 -YEL-GRN-**	SAME	090-5067-0T **25-1400 -RED-**	090-5068-0T **25-1600 -WHITE-**
The Simpsons™ Pinball Party †	6** (5 with Flipper Bats)	090-5032-0T **22-1080 -YEL-GRN-**	SAME	Not Used	090-5030-0T **23-1100 -ORANGE-**
		** *The Homer Head Assembly is affixed to an Upr. Rt. Style Flipper (no E.O.S. Switch):*	** 090-5020-20T **22-900 -YELLOW-**	Flippers (Mini-Bats) on 2nd Level Playfield: 090-5041-00T **25-1800 -BLU-GRN-**	090-5025-00 **24-1570 -BLUE-**
Terminator® 3: Rise of the Machines™ †	2	090-5032-0T **22-1080 -YEL-GRN-**	SAME	Not Used	Not Used
The Lord of the Rings™ †	2	090-5020-20T **22-900 -YELLOW-**	SAME	Not Used	Not Used
Ripley's Believe It or Not!® †	3	090-5032-0T **22-1080 -YEL-GRN-**	SAME	Not Used	090-5067-00T **25-1400 -RED-**
Elvis® †	4	090-5020-20T **22-900 -YELLOW-**	SAME	090-5020-30 **23-900 -GREEN-**	SAME
The Sopranos℠ †	2	090-5032-0T **22-1080 -YEL-GRN-**	SAME	Not Used	Not Used
NASCAR® and [NDSE] †	2	090-5030-0T **23-1100 -ORANGE-**	SAME	Not Used	Not Used
Grand Prix †	2	090-5030-0T **23-1100 -ORANGE-**	SAME	Not Used	Not Used

† Coil Part Numbers ending with a "**T**" signifies the Diode is on the top of the lug *(on the coil-winding side)*; Coil Part Numbers ending with a "**B**" signifies the Diode is on the bottom of the lugs.

** S.A.M. System Games **DO NOT REQUIRE DIODES**. If you use a coil from your stock which has a diode, remove it **ONLY FOR** S.A.M. System Games.

World Poker Tour™ (WPT)**	4	090-5032-ND **22-1080 [NO DIODE]**	SAME	090-5030-ND **23-1100 [NO DIODE]**	SAME
©Disney's Pirates of the Caribbean**	2	090-5030-ND **23-1100 [NO DIODE]**	SAME	Not Used	Not Used
Family Guy™ ** and Shrek™ **	3 Norm.	090-5030-ND **23-1100 [NO DIODE]**	SAME	090-5062-ND **23-1500 [NO DIODE]**	Not Used
	2 Mini	090-5046-01-ND **27-950 [NO DIODE]**	SAME		
Spider-Man™ ** and Black Spider-Man™ **	3	090-5032-ND **22-1080 [NO DIODE]**	SAME	Not Used	090-5032-ND **22-1080 [NO DIODE]**
Wheel of Fortune™ **	2	090-5032-ND **22-1080 [NO DIODE]**	SAME	Not Used	Not Used
Indiana Jones™ **	2	090-5032-ND **22-1080 [NO DIODE]**	SAME	Not Used	Not Used
BATMAN™ **	2	090-5032-ND **22-1080 [NO DIODE]**	SAME	Not Used	Not Used

APPENDIX E

Generic Coil Cross-Reference Guide † ‡

Flipper Coil Table ‡ ††

GAME NAME	Nº of Flippers	FLIPPERS w/E.O.S. Switch		FLIPPERS no E.O.S. Switch	
		SPI Nº / GAUGE-TURNS / Color		SPI Nº / GAUGE-TURNS / Color	
		LOWER LEFT	LOWER RIGHT	UPPER LEFT	UPPER RIGHT
Laser War ‡	2	090-5011-00 **22-750 / 30-2600**	SAME	Not Used	Not Used
Secret Service ‡	3	090-5006-00 **23-620 / 30-2600**	SAME	Not Used	090-5006-00 **23-620 / 30-2600**
Torpedo Alley ‡	3	090-5011-00 **22-750 / 30-2600**	090-5013-00 **23-700 / 30-2600**	Not Used	090-5012-00 **23-800 / 30-2600**
Time Machine ‡	2	090-5011-00 **22-750 / 30-2600**	SAME	Not Used	Not Used

‡ These coils are dual-wound.

Playboy 35th Anniversary ††	2	090-5020-02 **22-900 -YEL-YEL-**	SAME	Not Used	Not Used
ABC Monday Night Football ††	2	090-5020-02 **22-900 -YEL-YEL-**	SAME	Not Used	Not Used

†† A very small % of these games used a 090-5020-20 coil which used a proto-type Solid State Flipper System. The two types of coils both are 22-900 coils; the only difference is the addition of the 1N5404 Diode on the (-02) coils which was used in the Deger Design.

Robocop	2	090-5020-20 **22-900 -YEL-YEL-**	SAME	Not Used	Not Used
Phantom of the Opera	2	090-5020-20 **22-900 -YEL-YEL-**	SAME	Not Used	Not Used
Back to the Future	2	090-5020-20 **22-900 -YEL-YEL-**	SAME	Not Used	Not Used
The Simpsons	2	090-5020-20 **22-900 -YEL-YEL-**	SAME	Not Used	Not Used
Checkpoint	2	090-5020-20 **22-900 -YEL-YEL-**	SAME	Not Used	Not Used
Teenage Mutant Ninja Turtles	2	090-5020-30 **23-900 -GRN-GRN-**	SAME	Not Used	Not Used
Batman	2	090-5020-30 **23-900 -GRN-GRN-**	SAME	Not Used	Not Used
Star Trek 25th Anniversary	2	090-5020-30 **23-900 -GRN-GRN-**	SAME	Not Used	Not Used
Hook	2	090-5030-00 **23-1100 -ORG-ORG-**	090-5020-30 **23-900 -GRN-GRN-**	Not Used	Not Used
Lethal Weapon 3	2	090-5030-00 **23-1100 -ORG-ORG-**	SAME	Not Used	Not Used
Star Wars	2	090-5032-00 **22-1080 -YEL-GRN-**	SAME	Not Used	Not Used
Rocky & Bullwinkle & Friends	2	090-5020-30 **23-900 -GRN-GRN-**	SAME	Not Used	Not Used
Jurassic Park	3	090-5020-30 **23-900 -GRN-GRN-**	SAME	Not Used	090-5030-00 **23-1100 -ORG-ORG-**

Table continued on the next page.

APPENDIX E

Flipper Coil Table †

GAME NAME	Nº of Flippers	FLIPPERS w/E.O.S. Switch		FLIPPERS no E.O.S. Switch	
		SPI Nº / GAUGE-TURNS / Color		SPI Nº / GAUGE-TURNS / Color	
		LOWER LEFT	LOWER RIGHT	UPPER LEFT	UPPER RIGHT
Last Action Hero	2	090-5020-30 **23-900 -GRN-GRN-**	SAME	Not Used	Not Used
Tales from the Crypt	3	090-5032-00 **22-1080 -YEL-GRN-**	SAME	Not Used	090-5041-00 **25-1800 -BLU-GRN-**
The Who's Tommy	3	090-5020-30 **23-900 -GRN-GRN-**	SAME	090-5041-00 **25-1800 -BLU-GRN-**	Not Used
WWF Royal Rumble	4	090-5032-00 **22-1080 -YEL-GRN-**	SAME	090-5041-00 **25-1800 -BLU-GRN-**	SAME
Guns N' Roses	3	090-5032-00 **22-1080 -YEL-GRN-**	SAME	090-5030-00 **23-1100 -ORG-ORG-**	Not Used
Maverick	3	090-5032-00 **22-1080 -YEL-GRN**	SAME	Not Used	090-5032-00 **22-1080 -YEL-GRN-**
Mary Shelley's Frankenstein	3	090-5030-00 **23-1100 -ORG-ORG-**	SAME	Not Used	090-5030-00 **23-1100 -ORG-ORG-**
Baywatch	4	090-5030-00 **23-1100 -ORG-ORG-**	090-5020-30 **23-900 -GRN-GRN-**	090-5025-00 **24-1570 -See Note-**	090-5030-00 **23-1100 -ORG-ORG-**
Batman Forever	3	090-5032-00 **22-1080 -YEL-GRN-**	090-5020-20 **22-900 -YEL-YEL-**	Not Used	090-5020-30 **23-900 -GRN-GRN-**
Apollo 13	2	090-5032-00 **22-1080 -YEL-GRN-**	SAME	Not Used	Not Used
Golden Eye	2	090-5032-00 **22-1080 -YEL-GRN-**	SAME	Not Used	Not Used
Twister	2	090-5020-20 **22-900 -YEL-YEL-**	090-5032-00 **22-1080 -YEL-GRN-**	Not Used	Not Used
ID4: Independence Day	3	090-5032-00 **22-1080 -YEL-GRN-**	SAME	Not Used	090-5020-30 **23-900 -GRN-GRN-**
Space Jam †	2	090-5032-00T **22-1080 -YEL-GRN-**	090-5020-20T **22-900 -YEL-YEL-**	Not Used	Not Used
The Star Wars Trilogy - Special Edition †	2	090-5032-00T **22-1080 -YEL-GRN-**	SAME	Not Used	Not Used
The Lost World: Jurassic Park †	2	090-5032-00T **22-1080 -YEL-GRN-**	SAME	Not Used	Not Used
The X-Files †	2	090-5032-00T **22-1080 -YEL-GRN-**	SAME	Not Used	Not Used
Starship Troopers †	3	090-5030-00T **23-1100 -ORG-ORG-**	SAME	Not Used	090-5032-00T **22-1080 -YEL-GRN-**
Viper Night Drivin' †	2	090-5030-00T **23-1100 -ORG-ORG-**	SAME	Not Used	Not Used
Lost In Space †	2	090-5030-00T **23-1100 -ORG-ORG-**	090-5032-00T **22-1080 -YEL-GRN-**	Not Used	Not Used
Godzilla †	2	090-5032-00T **22-1080 -YEL-GRN-**	SAME	Not Used	Not Used
South Park †	2	090-5030-00T **23-1100 -ORG-ORG-**	SAME	Not Used	Not Used
Harley-Davidson® † *and* Harley-Davidson® 2nd Ed. †	2	090-5032-00T **22-1080 -YEL-GRN-**	090-5030-00T **23-1100 -ORG-ORG-**	Not Used	Not Used
Striker Xtreme (NFL) †	3	090-5032-00T **22-1080 -YEL-GRN-**	090-5030-00T **23-1100 -ORG-ORG-**	090-5030-00T **23-1100 -ORG-ORG-**	Not Used
Sharkey's Shootout †	3	090-5030-00T **23-1100 -ORG-ORG-**	SAME	090-5030-00T **23-1100 -ORG-ORG-**	Not Used
High Roller Casino †	2	090-5020-20T **22-900 -YEL-YEL-**	090-5032-00T **23-1080 -YEL-GRN-**	Not Used	Not Used
Austin Powers™ †	2	090-5020-30 **23-900 -GRN-GRN-**	090-5030-00T **23-1100 -ORG-ORG-**	Not Used	Not Used
MONOPOLY® †	3	090-5032-00T **22-1080 -YEL-GRN-**	SAME	Not Used	090-5062-00T **23-1500 -BLU-BLU-**
Playboy †	2	090-5030-00T **23-1100 -ORG-ORG-**	SAME	Not Used	Not Used
RollerCoaster Tycoon™ †	4	090-5032-00T **22-1080 -YEL-GRN-**	SAME	090-5067-00T **25-1400 -RED-RED-**	090-5068-00T **25-1600 -WHT-WHT**
The Simpsons™ Pinball Party †	6* (5 with Flipper Bats)	090-5032-00T **22-1080 -YEL-GRN-**	SAME	Not Used	090-5030-00T **23-1100 -ORG-ORG-**
		** The Homer Head Assembly is affixed to an Upr. Rt. Style Flipper (no E.O.S. Switch):*	* 090-5020-20T **22-900 -YEL-YEL-**	**Flippers (Mini-Bats) on 2nd Level Playfield:** 090-5041-00T **25-1800 -BLU-GRN-**	090-5025-00T **24-1570 -See Note-**
Terminator® 3: Rise of the Machines™ †	2	090-5032-00T **22-1080 -YEL-GRN-**	SAME	Not Used	Not Used
The Lord of the Rings™ †	2	090-5020-20T **22-900 -YEL-YEL-**	SAME	Not Used	Not Used
Ripley's Believe It or Not!® †	3	090-5032-00T **22-1080 -YEL-GRN-**	SAME	Not Used	090-5067-00T **25-1400 -RED-RED-**

† Coil Part Nºs ending with a "T" signifies the Diode is on the top of the lug (on the coil-winding side); Coil Part Nºs ending with a "B" signifies the Diode is on the bottom of the lugs.

APPENDIX F

Motor Specification (White Star Board System* Only) Table

Game Name	Function	Specifications	Part Numer
Apollo 13	Rocket Up/Down Movement	Bowman Motor 24VAC 60Hz 3W 6 RPM CCW	515-6383-00 *incl. Connector*
	Moon Unit Rotational Orbit	Multi Products Motor 24VAC 50/60Hz 3W 6 RPM CCW	515-6487-00 *incl. Connector*
	Shaker	Johnson Motor *(Vibrator)* 10.5VDC 10 AMP 2950 RPM CW	041-5029-**00** *MOTOR ONLY*
Golden Eye	Satellite Left/Right Movement	Bowman Motor 24VAC 60Hz 3W 6 RPM CW	515-6528-00 *incl. Connector*
Twister	Spinning Disc with Magnet	Multi Products Motor 24VAC *(041-5026-00)* 50/60Hz 3W 325 RPM CCW	515-6347-00 *incl. Connector*
	Backbox Fan (Tornado Wind)	Multi Products Motor 24VAC *(041-5052-00)* 50/60Hz 3W 3600 RPM CW	515-6531-00 *incl. Connector*
ID4: Independence Day	Alien Head Open/Close Movement	Servo Motor *(94322)*	041-5045-00 *MOTOR ONLY*
SPACE JAM (NO MOTOR USED)			
The Star Wars Trilogy - S.E.	X-Wing Left/Right Movement	Bowman Motor 24VAC *(041-5058-00)* 60Hz 3W 10 RPM CCW	515-6383-01 *incl. Connector*
The Lost World: Jurassic Park	Snagger & Center Link Lift Up/Down Movement	Multi Products Motor 20VDC *(041-5059-03)* 9 RPM Non-Directional	515-6715-03 *incl. Connector*
	Shaker	Johnson Motor *(Vibrator)* 10.5VDC 10 AMP 2950 RPM CW	041-5029-**00** *MOTOR ONLY*
The X-Files	X-File Cabinet Lift Up/Down Movement	Multi Products Motor 20VDC 9 RPM CCW	041-5057-00 *MOTOR ONLY*
Starship Troopers	Warrior Bug Forward/Reverse Movement	Haydon Switch & Instrument, Inc. Stepper Motor 12VDC 4.6W *(041-5062-00)*, Series 36000: 1.4"ø *(Non-Captive Shaft **not included**)* HSI #36864-12 *(Unipolar)* Travel per Step: .004 Step Angle: 15°	515-6794-00 *incl. Connector* **Requires 7" Shaft:** 530-5503-00
VIPER NIGHT DRIVIN' (NO MOTOR USED)			
Lost In Space	Spinning Disc with Magnet	Multi Products Motor 24VAC *(041-5046-00)* 50/60Hz 3W 325 RPM CCW	515-6347-00 *incl. Connector*
Godzilla	Shaker ‡	Multi #3811 0630 Motor (Vibrator) 12VDC 3100 RPM CW *(w/DRL PTS)* ‡	041-5029-**01** *MOTOR ONLY*
SOUTH PARK (NO MOTOR USED)			
Harley-Davidson® *1st through 3rd Editions*	Shaker ‡	Multi #3811 0630 Motor (Vibrator) 12VDC 3100 RPM CW *(w/DRL PTS)* ‡	041-5029-**01** *MOTOR ONLY*
	Motorcycle Lift Up/Down Movement	Autotrol 24VAC *(041-5072-02)* 20 RPM CCW	515-7025-00 *incl. Connector*
Striker Xtreme (NFL)	Goalie (Linebacker) Left to Right Movement	Multi #3590 12VDC *(041-5075-00)* 60 RPM	515-7071-00 *incl. Connector*
Sharkey's Shootout	Mystery Ball Rotating Movement	Hankscraft Motor Model-E 24VAC *(041-5076-00)* 50/60Hz 3W 20 RPM CW	515-7095-00 *incl. Connector*
High Roller Casino	Roulette Wheel Rotating Movement	Multi Products Motor 20VDC *(041-5078-00)* 17 RPM CCW	515-7153-00 *incl. Connector*
	Up/Dn. Ramp in Slot Mach. Lift Up/Down Movement	Haydon Switch & Instrument, Inc. Stepper Motor 12VDC 4.6W *(041-5062-00)*, Series 36000: 1.4"ø *(Non-Captive Shaft **not included**)* HSI #36864-12 *(Unipolar)* Travel per Step: .004 Step Angle: 15°	515-6794-00 *incl. Connector* **Requires Shaft 4¼":** 530-5503-01
Austin Powers™	Time Machine Rotating Movement	Multi Products Motor 24VAC *(041-5079-00)* 50/60Hz 20RPM CCW	515-7141-00 *incl. Connector*
	Laser Beam Left to Right Directional	Autotrol Motor 24VAC *(041-5081-00)* 50/60Hz 4W 10RPM Bi-Directional	515-7171-00 *incl. Connector*
	Dr. Evil Target Lift Up/Down Movement	Hankscraft Motor Model-E 24VAC *(041-5030-00)* 50/60Hz 6RPM CCW	515-5900-00 *incl. Connector*
Monopoly®	Mini-Flipper (Waterworks) Rotating Movement	Multi Prod. Motor & Gear Box #7000 EX00159A 20VDC 50/60Hz 85RPM CC/CCW	041-5083-00 *MOTOR ONLY*
Playboy	Triangular Billboard Rotating Movement	Autotrol Motor *(BD511 150-1387)* 24VAC 50/60Hz 12RPM Bi-Directional	041-5086-02 *MOTOR ONLY*
	Centerfold Mechanism Open/Close Movement	Multi Products *(3680)* Motor 12v DC 10/12 RPM CC/CCW	041-5075-04 *MOTOR ONLY*
	Tease Drop Screen Lift Up/Down Movement	Haydon Switch & Instrument, Inc. Stepper Motor 12VDC 4.6W *(041-5062-00)*, Series 36000: 1.4"ø *(Non-Captive Shaft **not included**)* HSI #36864-12 *(Unipolar)* Travel per Step: .004 Step Angle: 15°	515-6794-00 *incl. Connector* **Requires 7" Shaft:** 530-5503-00

‡ ***Please Note:*** *"-01" Shaker Motor is **Not Compatible** with old Shaker Motor 041-5029-**00** (Shaker Motor Assy. 515-5893-00). THIS NEW MOTOR CAN ONLY BE USED IN NEW SHAKER MOTOR ASSY. 515-5893-**01**.*

Table continued on the next page.

Game Name	Function	Specifications	Part Number
ROLLERCOASTER TYCOON™ (NO MOTOR USED)			
THE SIMPSONS™ PINBALL PARTY (NO MOTOR USED)			
Terminator® 3: Rise of the Machines™	Backbox Ball Shooter Up/Down Movement	Multi Products Motor 24VAC *(041-5079-01)* 21 RPM CW	515-7317-00 *incl. Connector*
The Lord of the Rings™	Balrog *(Motor & Gate)* Open/Close Movement	Multi Prod. Motor 20VDC Series 600B *(or equiv.)* 50/60Hz 10 RPM Bi-Directional	041-5088-01 *MOTOR ONLY*
RIPLEY'S BELIEVE IT OR NOT!® (NO MOTOR USED)			
Elvis®	Elvis™ Front/Back Movement	Haydon Switch & Instrument, Inc. Stepper Motor 12VDC 10W *(041-5089-00), (Non-Captive Shaft **not included**) HSI #46868-12-002*	500-6809-00 *incl. Connector* **Requires 7.25" Shaft:** 530-5658-00
	▶▶▶ OPTIONAL ◀◀◀ **Shaker Motor Kit** 502-5027-00	Multi #3811 0630 Motor *(Vibrator)* 12VDC *(041-5029-**01**) 3100 RPM (w/DRL PTS)*	515-5893-01 *incl. Connector*
The Sopranos℠	Bada Bing! Girls x2 Rotating Posts Movement	Autotrol Synchronous Motor 24VAC 4W 50/60Hz 45.7/54.9 RPM Bi-Directional	041-5092-00 **w/1" Shaft + 12" Leads**
NASCAR® and [NDSE]	Back Panel Rotating *(Car)* Windmill *(Skill Ball Enter)*	Multi Products Motor & Gear Box 20VDC Model #8000 *(EX-04-073)* 10 RPM	041-5093-00 *MOTOR ONLY*
Grand Prix	Back Panel Rotating *(Car)* Windmill *(Skill Ball Enter)*	Multi Products Motor & Gear Box 20VDC Model #8000 *(EX-04-073)* 10 RPM	041-5093-00 *MOTOR ONLY*
World Poker Tour™ (WPT) (NO MOTOR USED)			
The Simpons™ Kooky Carnival	Bart on Skateboard Left/Right Movement	Multi Products Motor with Crank 24VAC *(041-5095-01)* 50/60Hz 3W 14 RPM	500-6947-01 *incl. Connector*
	Left & Right Ramps Up/Down Movement	Multi Products Motor 24VAC *(041-5048-01)* 50/60Hz 3W 15 RPM CCW *(Qty. 2 in game)*	515-7558-00 *incl. Connector*
	Shaker *(details in SKC Manual, Page **24**)*	Multi #3811 0630 Motor *(Vibrator)* 12VDC 3100 RPM *(w/DRL PTS)*	041-5029-**01** *MOTOR ONLY*
©Disney's Pirates of the Caribbean	Spinning Disk	Multi #3811**R** 0630 Motor *(Vibrator)* 12VDC *(041-5029-**04**)* 3100 RPM *(w/DRL PTS)* *-04 is RoHS compliant; can substitute with -01 domestic*	511-5024-04 *incl. Connector*
	Pirate Ship Sinking/Raising Movement	Multi Products Motor & Gear Box 24VDC *Reversible* Model #7000D-DCM 12 RPM 35MM (.86" Shaft)	041-5101-00 *MOTOR ONLY*
Family Guy™ and Shrek™	Stewie Figurine Left & Right Movement	Stepper Motor NPM PF35T-48D4STD 5V RVB *(041-5102-00 Reference Only)*	511-5043-00 *incl. Connector*
Spider-Man™ and Black Spider-Man™	Doc Ock, Sandman & 3-Bank Up/Down Movement	Sync. Motor 24VAC 50/60Hz 3W 12 RPM CW *(041-5103-00 Reference Only)*	511-5063-00 *incl. Connector*
	▶▶▶ OPTIONAL ◀◀◀ **Shaker Motor Kit** 502-5027-00	Multi #3811**R** 0630 Motor *(Vibrator)* 12VDC *(041-5029-**04**) 3100 RPM (w/DRL PTS)* *-04 is RoHS compliant; can substitute with -01 domestic*	515-5893-01 *incl. Connector*
Wheel of Fortune™	Wheel (LED & OPTO) Spinning Movement	Stepper Motor Lin. Eng. 4118S-70-RO *(041-5105-00 Reference Only)*	511-5072-00 *incl. Connector*
Indiana Jones™	Ark (Pinball Elevator) Up/Down Movement	Multi Products Motor & Gear Box 24VDC *Reversible* Model #7000D-DCM 12 RPM 35MM (.63" Shaft)	041-5107-00 *MOTOR ONLY*
	Temple Newton Captive Ball Up/Down Movement	Sync. Motor 24VAC 50/60Hz 3W 12 RPM CW *(041-5103-00 Reference Only)*	511-5063-00 *incl. Connector*
	Swordsman Gate Open/Close Movement	Sync. Motor 24VAC 50/60Hz 3W 12 RPM CW *(041-5103-**02** Ref. Only)* **Modified Motor Shaft**	511-5063-**02** *incl. Connector*
	▶▶▶ OPTIONAL ◀◀◀ **Shaker Motor Kit** 502-5027-00	Multi #3811**R** 0630 Motor *(Vibrator)* 12VDC *(041-5029-**04**) 3100 RPM (w/DRL PTS)* *-04 is RoHS compliant; can substitute with -01 domestic*	515-5893-01 *incl. Connector*
BATMAN™	Crane Motor (Type 1) Forward & Back. Movement	Multi Products Motor & Gear Box 24VDC *Reversible* Model #7000D-DCM 12 RPM 35MM (.63" Shaft)	041-5107-01 *MOTOR ONLY*
	Crane Motor (**Type 2**) Forward & Back. Movement	*Multi Products Motor & Gear Box 24VDC Reversible* Model #7000D-DCM 12 RPM 35MM (.63" Shaft) *KEYED (includes Key #404 (535-0256-00))*	041-5107-**02** *MOTOR ONLY*
	Reveal (Joker) Open/Close Movement	Multi Products & Gear Motor 24VDC Model #7000 12 RPM with 26mm Diam. ø	041-5108-00 *MOTOR ONLY*
	▶▶▶ OPTIONAL ◀◀◀ **Shaker Motor Kit** 502-5027-00	Multi #3811**R** 0630 Motor *(Vibrator)* 12VDC *(041-5029-**04**) 3100 RPM (w/DRL PTS)* *-04 is RoHS compliant; can substitute with -01 domestic*	515-5893-01 *incl. Connector*

APPENDIX F

Motor Specification Table

The following table only list games that used motors. *Part Numbers starting with "515-" will include the Wiring Harness & Connector.*

Game Name	Function	Specifications	Part №
ABC Monday Night Football	Goal Post Up/Down Movement	Motor 24v A.C. 60 RPM CW	515-5222-00
Phantom of the Opera	Organ Up/Down Movement	Bowman Motor 24v 60Hz 3W 11 RPM CCW	515-5256-00
Checkpoint	Mag Wheel (in Backbox)	Motor D.C. (KEN)	041-5005-00
	Shaker	Johnson Motor (Vibrator)	041-5002-00
Teenage Mutant Ninja Turtles	Spinning Pizza Ball Deflector	Gear Motor 24v A.C. 325 RPM CW	515-5397-00
Batman	Bar Target Up/Down Movement	Bowman Motor 24v 60Hz 3W 11 RPM CCW	515-5256-00
Star Trek 25th Anniversary	Swinging Target	Bowman Motor 24v 22½ RPM	515-5534-00
	Transporter F/X	Gear Motor 24v A.C. 3½ RPM	500-5421-00
	Cooling Fan (for Transporter F/X)	4½" Motor 12v	041-5014-00
Lethal Weapon 3	Spinning Light	Motor 2½ v A.C. 4000 RPM CCW	041-5017-00
Star Wars	Bar Target Up/Down Movement	Bowman Motor 24v 60hz 3W 11 RPM CCW	515-5256-00
	R2D2 Robot Left/Right Movement	Bowman Motor 24v A.C. 22½ RPM CW	515-5571-00
	Death Star Rotation	Bowman "G" Motor 24v A.C. 60Hz 6 RPM CW	515-5570-00
Rocky & Bullwinkle & Friends	Nell Log "Cutting Blade" Forward/Back Movement	Autotrol Model E Motor 24v 60hz 4W 3 RPM CCW	041-5023-00
Jurassic Park	T-Rex Left/Right Movement	Multi Motor 5v D.C.	041-5025-00
	T-Rex Up/Down Movement	Bowman Motor 24v 11 RPM CW	041-5026-00
	Shaker	Johnson Motor (Vibrator)	041-5002-00
Last Action Hero	Crane Left/Right Movement	Multi Products Motor 12v D.C. #3312 OSC	041-5027-00
	Shaker	Johnson Motor (Vibrator) 10.5v D.C. 10 AMP 2950 RPM CW	041-5029-00
Tales from the Crypt	Tombstone Up/Down Movement	Bowman Motor 24v A.C. 6 RPM CCW	515-5900-00
	Shaker	Johnson Motor (Vibrator) 10.5v D.C. 10 AMP 2950 RPM CW	041-5029-00
The Who's Tommy	Mirror Up/Down Movement	Bowman Motor 24v A.C. 6 RPM CCW	515-5900-00
	Flipper Blinders	Servo Motor (94102)	041-5032-00
	Spinning Airplane Propellers	Motor D.C.	041-5033-00
WWF Royal Rumble	Shaker	Johnson Motor (Vibrator) 10.5v D.C. 10 AMP 2950 RPM CW	041-5029-00
Maverick, The Movie	Turning Paddle Wheel	Motor 24v A.C. 10 RPM	041-5036-00
Mary Shelley's Frankenstein	Creature Head Left/Right Movement	Servo Motor (94102)	041-5032-00
Batman Forever	Cannon Left/Right Movement	Bowman Motor 24v A.C. 60Hz 3W 6 RPM CCW	515-6383-00

APPENDIX G

Part Number Prefix Classification Codes

I. Electrical Source, Energy & Signal Converters
- 010- Transformers
- 031- Speakers
- 090- Solenoids (Coils)
- 150- Filters, Outlets, Varistors, Thermistors
- 200- Fuses

II. Conductors, Connectors & Insulators
- 034- Line Cords
- 036- Cable Assemblies & Wiring Harnesses
- 041- Motors
- 045- Connectors (All Types)
- 055- Lugs (M/F), Pins (M/F), Discs, Ring Terminals, Terminal Strips, etc.
- 060- Polarizing Keys and Conn. Covers
- 077- Lamp Sockets

III. Circuits & Circuit Elements
- 100- ICs
- 110- Transistors
- 112- Diodes (All Types including LEDs & Modules)
- 121- Resistors
- 123- Resistors (Variable & Adjustable)
- 124- Regulators & Bridge Rectifiers
- 125- Capacitors (Radial Lytics & Ferrites)
- 126- Piezo Crystal
- 127- Heatsinks
- 130- Capacitors (Tecates & Ceramics)
- 140- Oscillators (Clocks/Crystals)
- 165- Light Bulbs
- 180- Switches
- 181- Switch Membranes (Pads) & Piezo Sensors
- 190- Relays
- 960- EPROM *(Raw Part)*
- 965- EPROM *(Programmed Part)*

IV. Bolts, Screws, Nuts, Washers & Nails
- 231- Bolts
- 232- Screws (Pan Head)
- 234- Screws (HWH)
- 237- Screws (Misc.)
- 240- Nuts (Misc.)
- 242- Washers (Flat, Round)
- 244- Washers (Split Lock)
- 245- Nyliners
- 246- Washers (Lockers, External Tooth)
- 281- Nails

V. Mechanical Components
- 249- Rivets
- 251- Pins (Dowel), Finishing Nails, Hairpins, Spring Pins and Clevis Pins
- 254- Stand-Offs, Spacers and Shims
- 260- Steel Ball (All Types Steel, Glowing, Delrin, etc.)
- 265- Springs (Extension)
- 266- Springs (Compression)
- 267- Springs (Torsion)
- 269- Springs (Washers - Belleville, Wave)
- 270- Retaining Rings
- 280- Grommets, Bushings and Nyliners
- 283- Bearings

VI. Handles, Locks, Catches, Latches, Keys
- 355- Handles, Locks, Catches, Latches and Keys

VII. Fabricated Parts
- 390- Hinges
- 501- Coin Doors
- 515- Sub-Assemblies
- 520- Printed Circuit Boards (PCBs)
- 522- Display Glass
- 525- Wood Parts
- 530- Screw Machined Parts
- 535- Fabricated Parts
- 545- Molded (Extruded) Plastic and Rubber Parts (Rings, Sleeves, etc.)
- 550- Molded (Inserts)

VIII. In-House Assemblies
- 500- End Product (Systems and Models)
- 502- Kits (Created In-House)
- 505- Cabinets (complete)
- 510- Riveted Sub-Assemblies (In-House)
- 511- Sub-Assemblies (In-House)
- 515- Sub-Assemblies*

**2 or more 515-'s but still a sub-assembly.*

IX. Bulk Materials
- 600- Braided Wire & Ground Straps
- 601- Stranded Wire
- 602- Ribbon Cable
- 604- Telephone Line Cord
- 605- Sleeving (Shrink Tubing)
- 625- Velcro (non-adhesive)
- 626- Foam Rubber, Foam Pads, Rubber Bumpers (Blue Pads), Tape (All Types) Velcro (adhesive) and String / Rope

X. Miscellaneous
- 000- Tools *(see also 777-)* and Supplies
- 040- Clamps, Ties & Clips
- 042- Pulleys
- 091- Coin Mechs
- 205- Fuse Holders
- 631- Staples
- 660- Glass (Playfield, Backglass, etc.)
- 675- Cleaners
- 705- Packing & Shipping Items
- 755- Instruction, Coin Cards, Ins. Sheets
- 756- Information Sheets, Service Bulletins, Instruction Sheets in Kits and Templates
- 777- Tools (Wrenches and Drivers)
- 780- Manuals
- 802- Decal Kits (comprised of 820's)
- 820- Decals, Mylar and Labels (Sheets/Sets)
- 803- Plastic Kits (comprised of 830's)
- 830- Plastic Pieces (Butyrate Sheets/Sets)
- 880- Toys, Models, Figurines, etc.
- 900- Game Posters

APPENDIX H

Playfield Inserts (Plastic Light Covers)

Patterns: **STARBURST** **STIPPLE** 	**STARBURST CIRCULAR** 5/8" ø **550-5000-XX**	**STARBURST CIRCULAR** 3/4" ø **550-5001-XX**	**STARBURST CIRCULAR** 1" ø **550-5002-XX**	**STARBURST CIRCULAR** 1-3/16" ø **550-5003-XX**	**STARBURST CIRCULAR** 1-1/2" ø **550-5004-XX**
STARBURST CIRCULAR 2-1/4" ø **550-5005-XX**	**STARBURST CIRCULAR** 2-3/4" ø **550-5006-XX**	**PLAIN CIRCULAR** 3/4" ø **550-5007-XX**	**PLAIN CIRCULAR** 1" ø **550-5008-XX**	**PLAIN CIRCULAR** 1-3/16" ø **550-5009-XX**	**PLAIN CIRCULAR** 1-1/2" ø **550-5010-XX**
PLAIN CIRCULAR 2-1/4" ø **550-5011-XX**	**PLAIN CIRCULAR** 2-3/4" ø **550-5012-XX**	**STIPPLE CIRCULAR** 1" ø **550-5048-XX**	**STIPPLE 1" SQUARE** 1" **550-5019-XX**	**ROLLOVER BUTTON BASE** **550-5026-XX**	**WHITE STAR** *(only in white)* **545-5015-00**
STIPPLE RECTANGULAR 1-1/2" X 3/4" **550-5018-XX**	**STIPPLE RECTANGULAR** 1-5/8" X 1-1/2" **550-5051-XX**	**STARBURST RECTANGULAR** 2-1/4" X 1-1/8" **550-5044-XX**	**PLAIN RECTANGULAR** 2-1/4" X 1-1/8" **550-5049-XX**	**PLAIN RECTANGULAR** 1-1/4" X 1-1/2" **550-5050-XX**	**PLAIN RECTANGULAR** 2" X 2-1/2" **550-5063-XX**
STARBURST MINI SHIELD 1" X 1" **550-5024-XX**	**STARBURST LARGE SHIELD** **550-5025-XX**	**MINI HOT DOG** 1-5/8" **550-5020-XX**	**BEVEL HOT DOG** 3-1/2" **550-5021-XX**	**PLAIN HOT DOG** 3-1/2" **550-5022-XX**	**BANANA** **550-5023-XX**
STARBURST ARROW-SMALL **550-5013-XX**	**STARBURST ARROW-LARGE** **550-5070-XX**	**STARBURST ARROW-HEAD SMALL** **550-5014-XX**	**STARBURST ARROW-HEAD LARGE** **550-5015-XX**	**STARBURST BULLET** **550-5016-XX**	**STARBURST TRIANGLE** **550-5017-XX**

Note: *The shapes and sizes shown above are not to scale. Some shapes may no longer be available in every color.*

Instructions: Parts which may come in various colors (i.e. targets, some posts, playfield inserts, etc.) end in a 2-digit number which correspond to the color of that part. The "**-XX**" in part number which may come in various colors should be replaced with the desired 2-Digit number corresponding to the color desired below. *Not all colors may be available.*

PLASTIC PART COLOR CHART

Nº	Color	Nº	Color	Nº	Color	Nº	Color	Nº	Color	Nº	Color
-00	**Black** or Solid Clear	**-03**	Amber	**-06**	Yellow	**-09**	Purple	**-12**	Fluor. Blue	**-15**	Luminescent
-01	Clear	**-04**	Green	**-07**	Orange	**-10**	Fluor. Orange	**-13**	Teal Green	**-16**	Gold
-02	Red	**-05**	Blue	**-08**	White	**-11**	Fluor. Green	**-14**	Gray	**-17**	Trans. Brown

APPENDIX I

Anti-Loft Stand-Up Targets

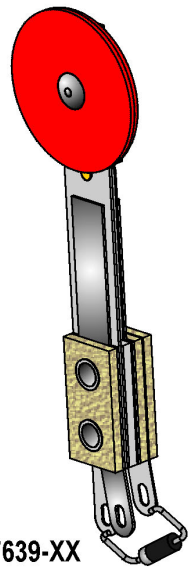

515-7639-XX
1" ø ROUND
ANTI-LOFT STAND-UP
SWITCH & TARGET
RIVETED ASSEMBLY*

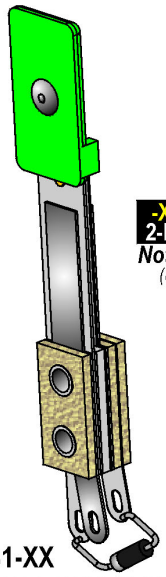

515-7581-XX
1" X 1/2" NARROW RECTANGLE
ANTI-LOFT STAND-UP
SWITCH & TARGET
RIVETED ASSEMBLY*

Ordering Note:
-XX REPLACE WITH 2-DIGIT FOR COLOR:
Not all colors available
(colors shown not exact)

-02	Red
-03	Amber
-04	Green
-05	Blue
-06	Yellow
-07	Orange
-08	White

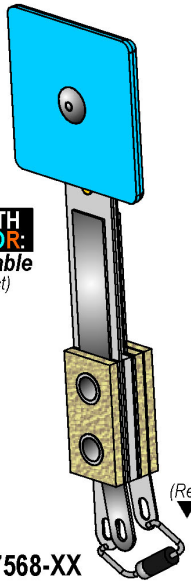

515-7568-XX
1" X 1" SQUARE
ANTI-LOFT STAND-UP
SWITCH & TARGET
RIVETED ASSEMBLY*

(Required on all Stand-Up Targets)
▼ Switch Diode, 1N4004
112-5003-00

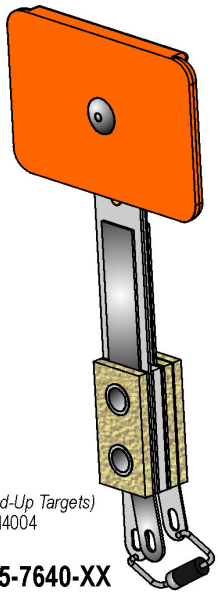

515-7640-XX
1" X 1-1/2" WIDE RECTANGLE
ANTI-LOFT STAND-UP
SWITCH & TARGET
RIVETED ASSEMBLY*

*Some targets may require the lugs position be changed to the left *or* to the right, depending on the application; these targets will have a different part number and are called out in the game manual they are used in *(see Section 4, Chapter 1, Parts Identification & Location, Playfield ... - Switches.) Review the game manual for the game desired for the original target used or application.*

For Anti-Loft Application use
Large Foam Pad,
5/8" X 7/16" X 3/16" Thick
626-5078-00

For** > Light < **Anti-Loft Application use
Small Foam Pad,
7/16" X 7/16" X 1/8" Thick
626-5029-00

Foam Pads have self-adhesive backing

or

Anti-Loft Switch Back Plate ▼
535-9823-01

ASM. REF. IN-HOUSE USE ONLY:
Light Anti-Loft Stand-Up Target Assemblies which includes the Anti-Loft Switch Back Plate, Switch Mounting Bracket and Foam Pad *(Small)*: 500-5835-XX (ROUND), 500-5857-XX (NARROW), 500-5232-XX (SQUARE) and 500-5321-XX (RECTANGLE).

Anti-Loft Stand-Up Target Assemblies which includes the Anti-Loft Switch Back Plate, Switch Mounting Bracket and Foam Pad *(Large)*: 500-7062-XX (ROUND), 500-6985-XX (NARROW), 500-6984-XX (SQUARE) and 500-7063-XX (RECTANGLE).

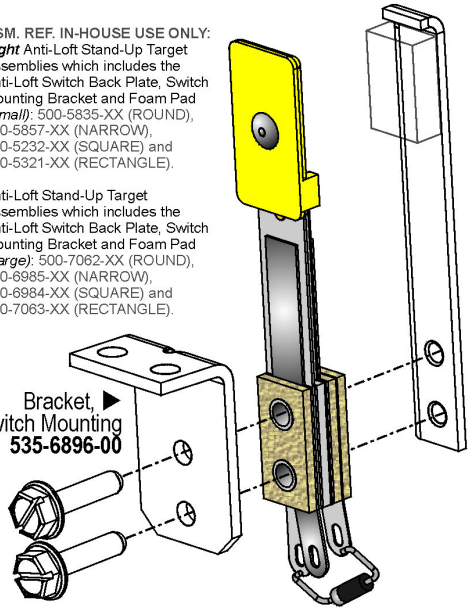

Bracket, ▶ Switch Mounting
535-6896-00

▲ #6-32 X 5/8" Slotted HWH Swage (Zinc) Screws (Qty. 2/per) **237-5976-04**

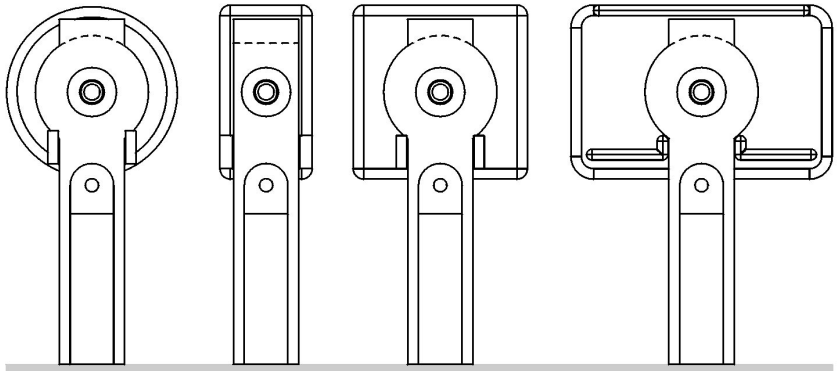

REAR VIEWS OF ANTI-LOFT TARGET & SWITCH ASSEMBLIES

The material of the Anti-Loft Switch has been extended higher to be used with the Anti-Loft Switch Back Plate. ***IMPORTANT:*** *Switch & Target Assemblies (**X**) **without** the extension (the predecessors) **SHOULD NOT** be used with an **Anti-Loft** Switch Back Plate (shown left).*

APPENDIX REFERENCE FOR PINBALL GAMES WHICH USED THE BELOW SWITCH & TARGET ASSEMBLIES NOTE:

*The Switch & Target Assemblies (**X**) **without** the extension have the following part numbers*: 515-5966-XX (Round), 515-5967-XX (Narrow), 515-5162-XX (Square) and 515-6027-XX (Rectangle) and should only be used with the Switch Back Plate (shown right), 535-6452-00 and Small Foam Pad, 626-5029-00.*

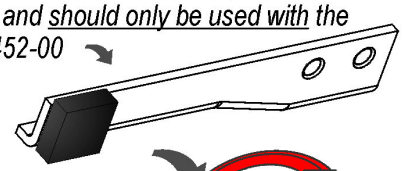

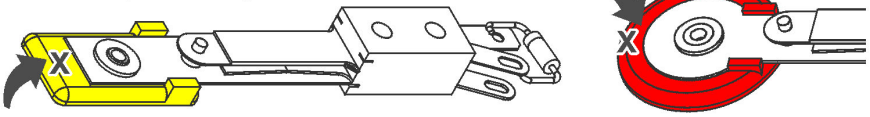

* *If the above referenced part numbers are no longer available from the factory or your distributor, it will be substituted with the appropriate Anti-Loft counterpart. Not all colors may be available.*

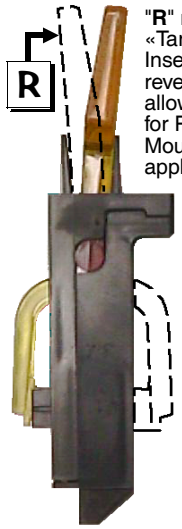

"**R**" means «Target Insert» is reversed, allowing for Rear Mounted application.

-XX REPLACE WITH 2-DIGIT FOR COLOR:
-00 Black
-01 Clear
-02 Red
-03 Amber
-04 Green
-05 Blue
-06 Yellow
-07 Orange
-08 White
-09 Purple
-10 Fluor. Orange
-11 Fluor. Green
-12 Fluor. Blue
-13 Teal Green
-14 Gray
-15 Luminescent
-16 Gold
Note: Not all colors available.

Take Note:

1. **Items A-E** come in various colors. *These targets may not be available in every color.* The "**-XX**" in should be replaced with the desired 2-Digit number for the color desired as described in the Color Chart below. *As of print date, the following colors were used :*
-01 Clear (A, D); **-02** Red (A, B, C, D, E); **-03** Amber (D, E); **-04** Green (A, B); **-05** Blue (C); **-06** Yellow (A, C), **-09** Purple (B, D); **-11** Fluorescent Green (A, B, D)
2. *For location(s) and type of Stand-Up Targets used, if any, see Section **4**, Chapter **1**, Parts Identification & Location.*

Nr.	STAND-UP TARGET PARTS	SPI PART Nr.
A	Modular Stand-Up Target Narrow Assembly	500-6138-XX
	Stand-Up Target Narrow (Insert)	545-6138-XX
B	Modular Stand-Up Target Square Assembly	500-6139-XX
	Stand-Up Target Square (Insert)	545-6139-XX
C	Modular Stand-Up Target Rectangle Asm.	500-6228-XX
	Stand-Up Target Rectangle (Insert)	545-6228-XX
D	Modular Stand-Up Target Round Assembly	500-6075-XX
	Stand-Up Target Round (Insert)	545-6075-XX
E	Modular Stand-Up Target 1" Spherical Asm.	500-6189-XX
	Stand-Up Target 1" Spherical (Insert)	545-6189-XX

To Replace the « Target Insert » or change Target Orientation :

Items A-E Note: For the Target Assembly use the "**500-**" SPI Part Number(s) shown in the Parts Table below. To receive the Target Assembly with the « Target Insert » « ***R**eversed » simply add a **"R"** at the end of the Part Number. See Side View picture left to compare (dashed line shows target reversed).* For just the «Target Insert» use the "**545-**" SPI Part Number.

To reverse it yourself or to just change the insert:

1. With a small flat head screwdriver, push into the small tab at the bottom of the target front and give a slight twist motion to "pop" the two halves.

2. Push the Target Insert bottom in at the same time while you slide the top (front) part up, then let go of the insert as the two halves come apart.

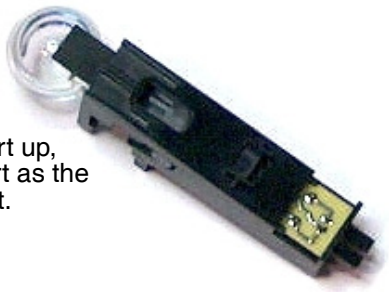

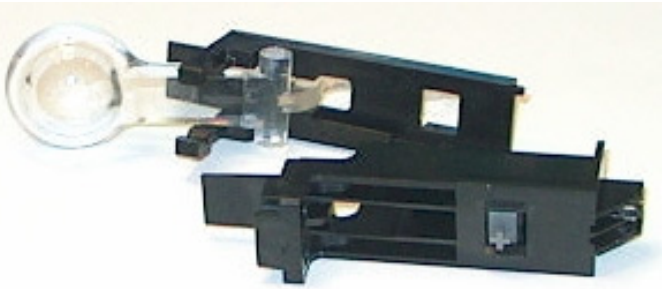

3. Replace target or reinsert it into the other size while sliding the two halves back together.

Note: *If you were reversing the orientation, don't forget to also turn the Switch Actuator PCB **180°**. Test Switch.*

APPENDIX J

Coin Cards for USA & International (Euro & Non-Euro) Pricing Defaults

If more than one Pricing Scheme is available for countries listed, the asterisk listed beside the option, denotes the Factory Default Setting.

VISIT OUR WEBSITE TO DOWNLOAD ALL THE LATEST COIN CARDS (INCLUDING COIN CARDS FOR OLDER GAMES).

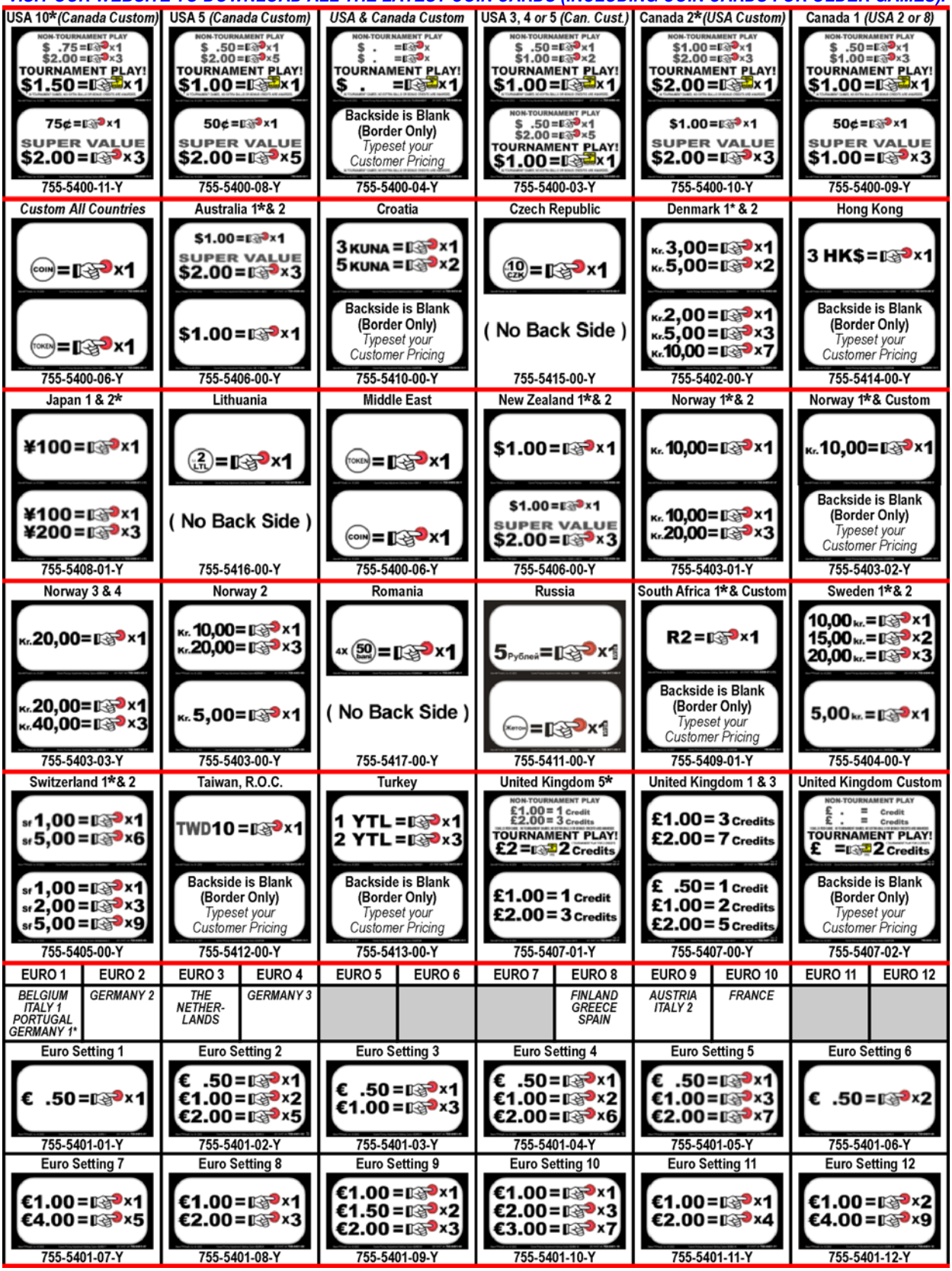

*Section **3**, Chapter **4**, **GO TO ADJUSTMENTS MENU**, Adj. **18**, **Game Pricing**, **USA & International (non-Euro) and Euro 1-12 Summary & International (Euro) Standard Pricing Select Tables**, summarizes Standard or Custom Pricing Schemes & the Dip Switch Setting required.*

Dowload all Coin Cards from our website:
http://www.sternpinball.com/coinagecards.shtml

or order SPI Part No.: 970-2007-00 (970-2002-00 thru 970-2006-0) CD-Rom through your Local Distributor.